Husqvarna VIKING

Spare Part List

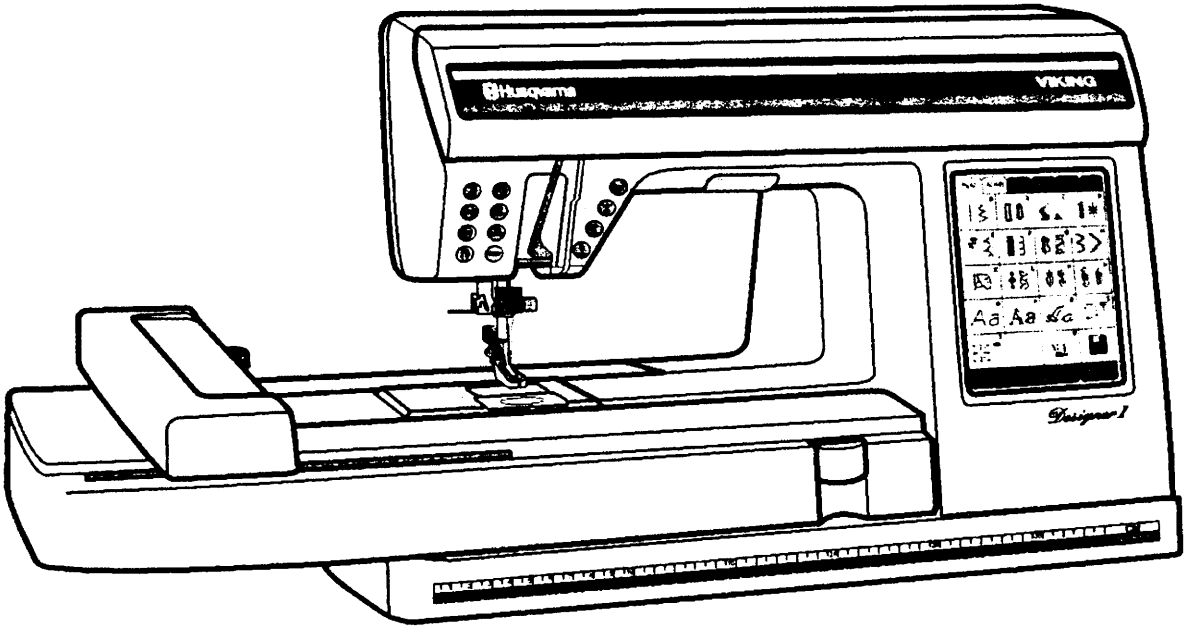

Designer I

Made and Printed In Sweden
Dec-2001

104 22 09-96

Part No	Description	Page
411 72 10-01	Washer	G
411 75 00-08	Needle bar	K
411 75 03-02	Screw	K
411 75 04-01	Screw	K
411 78 10-03	Lamp	A, K
411 96 68-01	Screw	A, D,K,P,R
411 96 68-03	Screw	A,B,K
411 96 68-04	Screw	K
411 96 68-05	Screw	A, M
411 96 68-07	Screw	P
411 96 68-08	Screw	P
411 96 68-10	Screw	B
411 96 68-12	Screw	C
411 96 68-21	Screw	K
411 96 68-24	Screw	K
411 96 68-25	Screw PT 16*8	M, K
411 96 71-07	Screw	C
411 96 72-04	Screw M 3*6	P
411 96 73-06	Screw 25*6	R
411 96 74-01	Screw	A
411 96 75-01	Washer	M
411 98 14-01	Washer	S,
412 00 13-01	Washer	E
412 05 60-01	Screw	C
412 05 60-04	Screw	A, F, H, P
412 05 60-06	Screw	B, C, F, H, I, L
412 05 60-10	Screw	C, F
412 05 60-11	Screw	G, P, R
412 05 60-12	Screw M 4*6	P, R
412 15 27-01	Cog wheel	F
412 15 78-01	Cord device 220 V	N
412 15 79-03	Cord device 120 V	N
412 15 81-01	Cord device Australia	N
412 15 98-01	Spring	N
412 18 45-01	Foot	N
412 19 53-01	Washer	F
412 21 14-03	Screw	K
412 21 14-04	Screw	K
412 21 14-06	Screw	K
412 21 14-14	Screw	C
412 21 14-20	Screw	G
412 22 98-01	Nut	H
412 28 19-02	Screw	G, K
412 28 54-02	Presser bar	K
412 28 79-01	Screw	D
412 30 06-01	Driver	L
412 30 07-01	Spring	L
412 30 08-01	Pully	L
412 30 09-02	Handwheel	L
412 30 30-01	Guide arm	K
412 30 50-01	Foot	C
412 30 55-01	Rubber ring	B
412 30 66-01	Shaft	E
412 31 69-01	Spring	K
412 31 60-49	Pin	R
412 31 79-01	Clutch	L
412 31 81-01	Clamp	I
412 31 84-01	Bushing, feed dog	G
412 32 27-04	Bobbin winding unit	B
412 32 33-02	Sealing washer	B
412 32 34-08	Step motor compl. Z-Z	K
412 32 34-09	Step motor compl. Feeding	H
412 33 62-01	Cog wheel	K
412 32 84-01	Clamp	I, L
412 33 75-01	Spring	F
412 33 93-01	Attatchment, motor	C
412 33 94-01	Muffler, motor	C
412 33 97-01	Motor	C
412 34 26-01	Spring	B
412 34 50-01	Eccentric	B
412 34 51-01	Adjusting arm	B
412 34 54-01	Cog belt , motor	L
412 34 60-01	Stop ring	I
412 34 81-01	Spring	H
412 34 82-01	Screw	H
412 34 85-01	Joint cross	H
412 34 88-01	Fastner	H
412 34 96-01	Cablage, motor	C
412 34 97-02	Cablage for PC Board	C
412 35 26-01	Washer	I
412 35 33-02	Driving wheel compl.	C
412 35 42-01	Pully	I
412 35 62-01	Pin	B
412 36 83-03	Arm shaft compl.	L
412 36 84-01	Cog belt	L
412 36 87-01	Pin	L
412 37 11-01	Thread real disc (big)	A
412 37 11-02	Thread real disc (small)	A
412 37 82-01	Nut	G
412 38 42-02	Cog wheel	P, R
412 38 43-01	Washer	P, R
412 39 09-14	Plastic bag with acc.	O
412 39 47-01	Washer, hook	E
412 39 90-01	Nut	S,
412 40 97-01	Screw	K
412 41 12-02	Ankel	K
412 42 37-01	Knife	A, B, D
412 44 40-02	Hook	E
412 44 44-01	Gear	E
412 44 68-01	Screw	S,

Part No	Description	Page
412 44 69-01	Grip 150x240	S,
412 44 83-45	Circuit board	C
412 44 87-01	Spring, bobbin winding	B
412 45 09-01	Touch board	A
412 45 11-01	Circuit board, push buttons left	A
412 45 23-01	Knife, compl	B
412 45 24-01	Knife holder	B
412 45 38-01	Circuit bord, push buttons right	M
412 46 45-01	Screw	E
412 47 16-01	Thread tension	E
412 49 17-01	Floppy disk drive	A
412 49 25-01	Foot control compl.	N
412 49 30-01	Control unit with winder	N
412 49 49-01	Distance	C
412 50 01-01	Sewing head, frame compl	K
412 50 06-01	Bearing	K
412 50 08-01	Gear segment	K
412 50 09-01	Spring	K
412 50 10-01	Spring	K
412 50 11-01	Link	K
412 50 15-01	Bearing	K
412 50 19-01	Back holder, needle threader	K
412 50 20-01	Front holder, needle threader	K
412 50 21-01	Needle threader	K
412 50 22-01	Setting plate	K
412 50 23-02	Eccentric needle adjust.	K
412 50 24-01	Cross head compl.	K
412 50 27-01	Calibration stop	K
412 50 31-01	Rack compl.	K
412 50 34-01	Pressar bar lifter	K
412 50 41-01	Spring	K
412 50 42-01	Connecting Board, sewing head	K
412 50 43-01	Lamp holder compl.	K
412 50 46-01	Wedge	K
412 50 47-01	Clamp ring	K
412 50 48-01	Clamp ring	K
412 50 52-01	Plate	K
412 50 55-01	Frame , lower	K
412 50 56-01	Step motor	K
412 50 60-01	Side feeding unit	F
412 50 63-01	Draw bar	F
412 50 64-01	Cog segment	F
412 50 65-01	Clamp	F
412 50 66-01	Draw bar	F
412 50 72-01	Spring	H
412 50 73-01	Eccentric	F
412 50 87-01	Spring	D
412 50 88-01	Damper	D
412 50 89-01	Thread cutter gearbox	D
412 50 97-01	Slide	D
412 51 01-01	Thread hook	D
412 51 05-01	Cover, thread cutter	D
412 51 28-01	Step motor compl.	D
412 51 31-01	Cable, thread sensor compl	D
412 51 33-01	Bobbin holder	D
412 51 34-01	Bobbin hatch	D
412 51 36-01	Feed unit	G
412 51 37-01	Guide compl. With carriger	G
412 51 43-01	Block, guide	G
412 51 44-01	Feed carrige	G
412 51 49-01	Spring	G
412 51 50-01	Feed dog compl.	G
412 51 51-01	Feed dog	G
412 51 53-01	Spring	G
412 51 54-01	Lever, Feed lift	G
412 51 55-01	Spring	G
412 51 56-01	Stop ring	G
412 51 63-01	Worm gear	I
412 51 64-01	Holder, stopright card	C
412 51 68-01	Lower shaft	I
412 51 69-01	Eccentric feed	I
412 51 70-01	Distance	I
412 51 76-01	Accessory box	O
412 51 78-01	Embroidery box compl.	S
412 51 89-01	Nut	M
412 51 90-01	Housing, Thread tension	M
412 51 91-01	Sensor	M
412 51 92-01	Spring	M
412 51 94-01	Adjusting sleeve	M
412 51 95-01	Push buttons	M
412 51 97-01	Thread tension cover, replaced by 412 65 55-01	M
412 51 98-01	Thread guide	A
412 52 01-01	Sealing	A
412 52 03-01	Holder	A
412 52 05-01	Lamp comp.	A
412 52 08-01	Lamp guard	A
412 52 09-01	Thread holder	A
412 52 10-01	Reel pin	A
412 52 13-01	Thread guide, replaced by 412 65 55-01	A
412 52 14-01	Spring	M
412 52 15-01	Heat protector	A
412 52 16-01	Door, front cover	A
412 52 20-01	Hinge	A
412 52 21-01	Spring	A
412 52 23-01	Bushing	A
412 52 25-01	Back cover, upper	B
412 52 26-01	Handle	B
412 52 28-01	Back cover, free arm	B
412 52 30-01	Cover plate, embroidery	B

Part No	Description	Page
412 52 33-01	Base plate, cover	C
412 52 34-01	Base plate	C
412 52 40-01	Step motor Y-unit compl	R
412 52 42-01	Cable, embroidery unit	P
412 52 46-01	Cog wheel, large	P, R
412 52 48-01	Holder, X-cog belt	P
412 52 49-01	Adjuster, belt tension	P
412 52 52-01	Bearing, Ver 1, replaced by 412 66 10-01	P
412 52 53-01	Holder, Y-cog belt	R
412 52 54-01	Sensor Ver 1	R
412 52 54-02	Sensor Ver 2, Gray	R
412 52 55-01	Cog belt, Y-unit	P
412 52 56-01	Shaft ver 1 replaced by 412 66 10-01	P
412 52 61-01	Circuit board	R
412 52 64-01	Frame Y-unit Ver 1,	R
412 52 64-02	Frame Y-unit Ver 2, Mega Hoop	R
412 52 65-01	Button Ver 1,	R
412 52 65-02	Button Ver 2, Gray	R
412 52 66-01	Spring	R
412 52 67-01	Cog belt	R
412 52 69-01	Shaft Ver 1, replaced by 412 62 86-01	R
412 52 71-01	Embroidery hoop 150x240	S
412 52 74-01	Embroidery hoop 100X100	S
412 52 77-01	Upper cover, X-unit	P
412 52 78-01	Lower cover, X-unit	P
412 52 79-01	Cover,Y-unit	R
412 52 80-01	Step motor cover, Y-unit	P
412 52 83-01	Locker, Embroidery unit	P
412 52 84-01	Spring	P
412 52 85-01	Guide rail	P
412 52 92-01	Cover	O
412 52 97-01	Friction tape	P
412 53 03-01	Screen	I
412 53 30-01	Stitch plate	D
412 53 33-01	Push buttons	A
412 53 34-01	Guide, real pin	A
412 53 36-01	Link	A
412 53 37-01	Knob, feed dog lowering	A
412 53 74-01	Embroidery templet 100x100	S
412 53 75-01	Embroidery templet 150x240	S
412 53 78-01	Cable, floppy	A
412 53 80-01	Cable, display	A
412 53 80-02	Cable, lamp transformer	A
412 54 02-01	Feeding unit	H
412 54 06-01	Calibration stop	H
412 54 07-01	Damper	H
412 54 08-01	Cog wheel	H
412 54 10-01	Shaft	H
412 54 48-01	Thread guide	A, M
412 54 52-01	Cog segment	D
412 54 53-01	Lever	D
412 54 54-01	Fetcher	D
412 54 55-01	Knife slide	D
412 54 56-01	Spring	C
412 54 64-01	Calibration lever	P, R
412 54 65-01	Holder	R
412 54 66-01	Pin , feed dog lowering	P
412 54 67-01	Transformer compl.	A
412 54 69-01	Cable, conn card, sewing head	C
412 54 69-02	Cable, connection card- left	A
412 54 69-03	Cable, connection card- right	M
412 54 69-04	Cable, connection card, stop right	C
412 54 96-01	Holder	A
412 54 97-01	Tap, thread guard	M
412 54 98-01	Washer	M
412 55 01-01	Bobbin case compl.	E
412 55 39-01	Card holder Ver 1, replaced by 412 66 10-01	P
412 55 40-01	Frame Ver 1	R
412 55 42-01	Cable holder	A
412 55 43-01	Cover, bobbin winding	A
412 55 48-01	Step motor, thread tension	M
412 55 57-01	Spring	R
412 55 58-01	Holder	A
412 55 62-01	Step motor	F
412 55 79-01	Thread guide	A
412 55 80-01	Thread guide	A
412 55 81-01	Washer	M
412 55 82-01	Cable	C
412 55 83-01	Holder	R
412 55 84-01	Damper	L
412 55 85-01	Connecting board	P
412 55 93-01	Circuit board, stop right	C
412 56 13-01	Cutter, thread brake	D
412 56 15-45	Bobbin 10 pack	E
412 56 18-01	Step motor comp.	P
412 56 22-01	Cable holder, arm shaft	A
412 56 31-01	Thread guide	A
412 56 39-01	Cover, X-unit	P
412 56 43-03	Transformer comp.	C
412 56 54-01	Accessories , Embroidery	S
412 56 85-01	Dust cover	E
412 56 86-01	Adjusting washer	E
412 56 97-01	Distance, back cover	B

Part No	Description	Page
412 57 75-03	Cable holder	C
412 57 78-01	ESD-cable	H
412 57 97-01	Grip 100x100	S
412 58 16-01	Protector, floppy	A
412 58 25-01	Screw	K
412 58 99-01	Distance	B
412 59 00-01	Cover Ver 1, replaced by 412 62 86-01	R
412 59 00-02	Cover Ver 2, Gray	R
412 59 01-01	Cog wheel	M
412 59 11-01	Cable	K
412 59 78-01	ESD-spring	C
412 60 01-01	Needle bar frame	K
412 60 02-01	Sewing head	K
412 60 03-01	Thread take up	K
412 60 04-01	Hook cover	D
412 60 05-02	Thread tension unit, (Lay in) ver.2	M
412 60 06-01	Washer set, thread tension	M
412 60 10-01	Distance, step motor	M
412 60 11-01	Distance, thread brake	M,
412 60 17-01	Thread brake, inner	M
412 60 18-01	Thread brake, outer	M
412 60 71-01	Embroidery disks	S
412 61 31-01	Spring	M
412 61 32-01	Heat protector,	A
412 61 33-01	Lever	M
412 61 39-01	Thread tension cover, Ver 1 replaced by 412 62 86-01	A, M
412 61 39-02	Thread tension cover, Ver 2	A,M
412 61 41-01	Front cover	A
412 61 42-01	LCD	A
412 61 92-01	Frame Ver 2, Mega Hoop	R
412 62 86-01	Mega hoop re-built kit	R
412 62 88-01	X-shaft Ver 2, Mega Hoop	R
412 62 89-01	Y-shaft Ver 2, Mega hoop	P
412 62 90-01	Bearing Ver 2, Mega Hoop	R
412 65 55-01	Lay-In thread tension kit	A
412 66 09-01	Fuse 3,5A 250V	C
412 66 10-01	X-shaft re-built kit	P
412 66 32-01	Needle threader Compl.	K
721 41 69-70	Pin	H
721 41 87-70	Pin	I, L
721 42 10-10	Pin	I
724 11 89-01	Screw	A
725 52 20-05	Screw M3*6	H
725 52 28-05	Screw	K
725 52 85-05	Screw	K
728 52 17-05	Screw	F, H, M, K
728 52 18-05	Screw	K
728 52 22-05	Screw M3*8	K
728 52 83-05	Screw M4*4	G
728 52 85-05	Screw	K
728 52 87-05	Screw M4*8	E
728 82 83-05	Screw	I, L
728 53 20-05	Screw	L
728 73 20-01	Screw	L
728 73 64-05	Screw 6*10 mm	C
734 11 12-71	Washer	D
734 11 25-41	Washer	K
735 21 36-01	Washer	C
735 31 05-00	C-Washer	M
735 31 08-20	C -Washer	E, P, R
735 31 10-20	C- Washer	P, R
735 58 23-00	Washer	M
735 58 35-00	Locking washer	A
735 58 55-00	Washer	L
735 61 18-40	C-Washer	K
735 61 13-40	Washer	D
735 61 36-40	C-washer	F, K
735 61 53-40	C-Washer	K
ACCESSORIES		
401 53 99-01	Buttonhole knife	O
401 55 55-01	Brush	O
411 17 32-01	Clearance plate	O
412 08 38-47	Marking pen, neutral	O
412 56 15-45	Bobbins (10)	O
412 36 14-01	Stitch plate opener	O
412 38 15-01	Screw driver	O
412 39 77-01	Net	O
412 44 77-01	Siccor	O
412 49 06-01	Templet pencil	O
412 57 01-01	Sleeve, lamp	O
412 60 19-01	Guide	O
PRESSER FEET		
411 73 95-01	Edge guide G	O
411 85 30-01	Presser foot H	O
412 00 16-01	Presser foot, decorative stitches	
412 03 73-01	Presser foot A	O
412 34 65-01	Presser foot S	O
412 37 08-01	Quilting foot P	O
412 38 01-01	Presser foot B	O
412 38 02-01	Buttonhole foot C	O
412 38 04-01	Presser foot D	O
412 38 05-01	Zipper foot E	O
412 38 06-01	Presser foot J	O
412 40 80-01	Button hole meter, comp.	O
412 43 37-01	Presser foot R	O

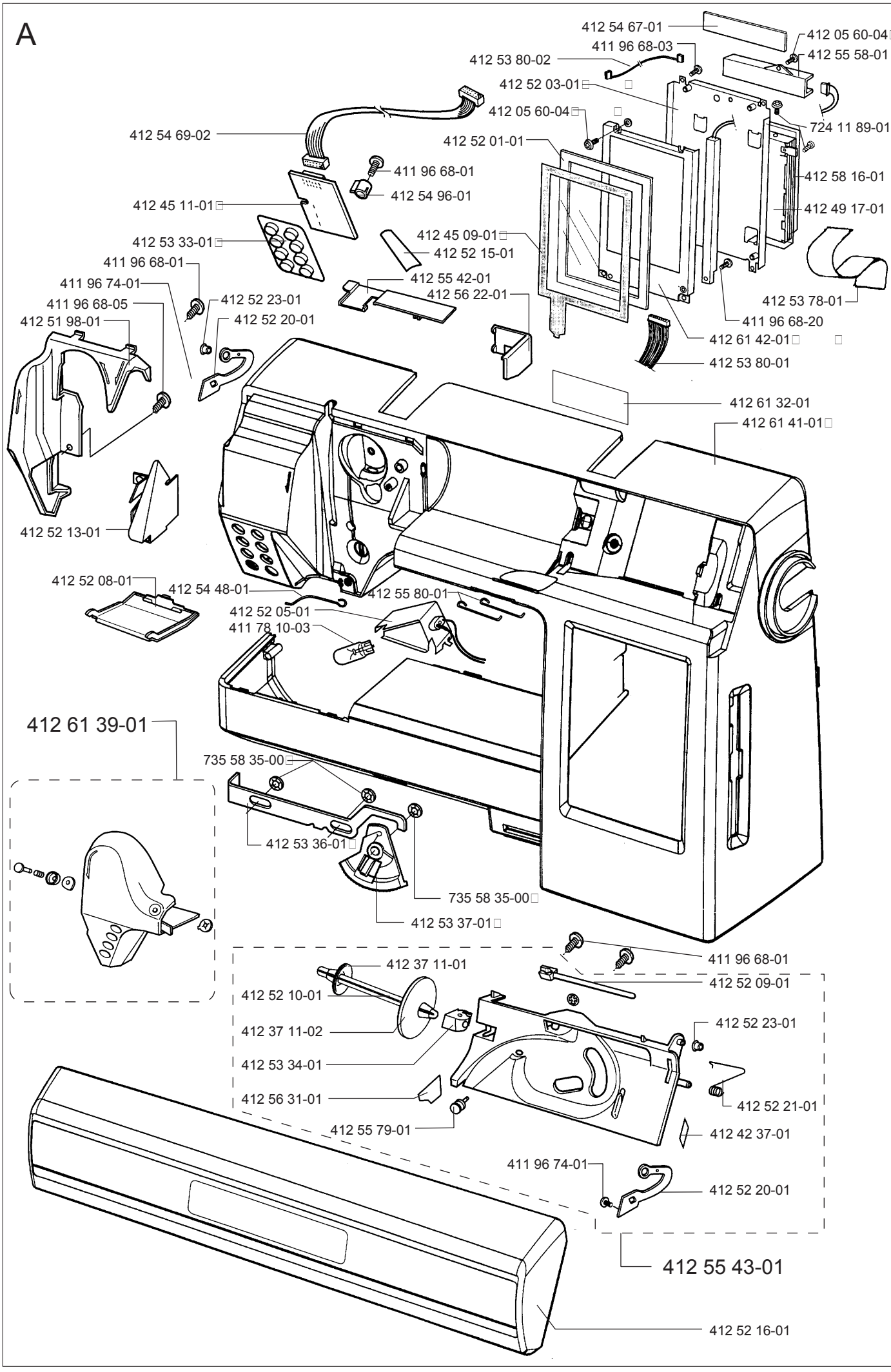
A
412 54 67-01
412 05 60-04
411 96 68-03
412 55 58-01
412 53 80-02
412 52 03-01
412 05 60-04
724 11 89-01
412 54 69-02
412 52 01-01
411 96 68-01
412 58 16-01
412 54 96-01
412 45 11-01
412 49 17-01
412 45 09-01
412 53 33-01
412 52 15-01
411 96 68-01
412 55 42-01
411 96 74-01
412 56 22-01
412 52 23-01
411 96 68-05
412 53 78-01
412 51 98-01
412 52 20-01
411 96 68-20
412 61 42-01
412 53 80-01
412 61 32-01
412 61 41-01
412 52 13-01
412 52 08-01
412 54 48-01
412 55 80-01
412 52 05-01
411 78 10-03
412 61 39-01
735 58 35-00
412 53 36-01
735 58 35-00
412 53 37-01
411 96 68-01
412 37 11-01
412 52 09-01
412 52 10-01
412 52 23-01
412 37 11-02
412 53 34-01
412 56 31-01
412 52 21-01
412 55 79-01
412 42 37-01
411 96 74-01
412 52 20-01
412 55 43-01
412 52 16-01

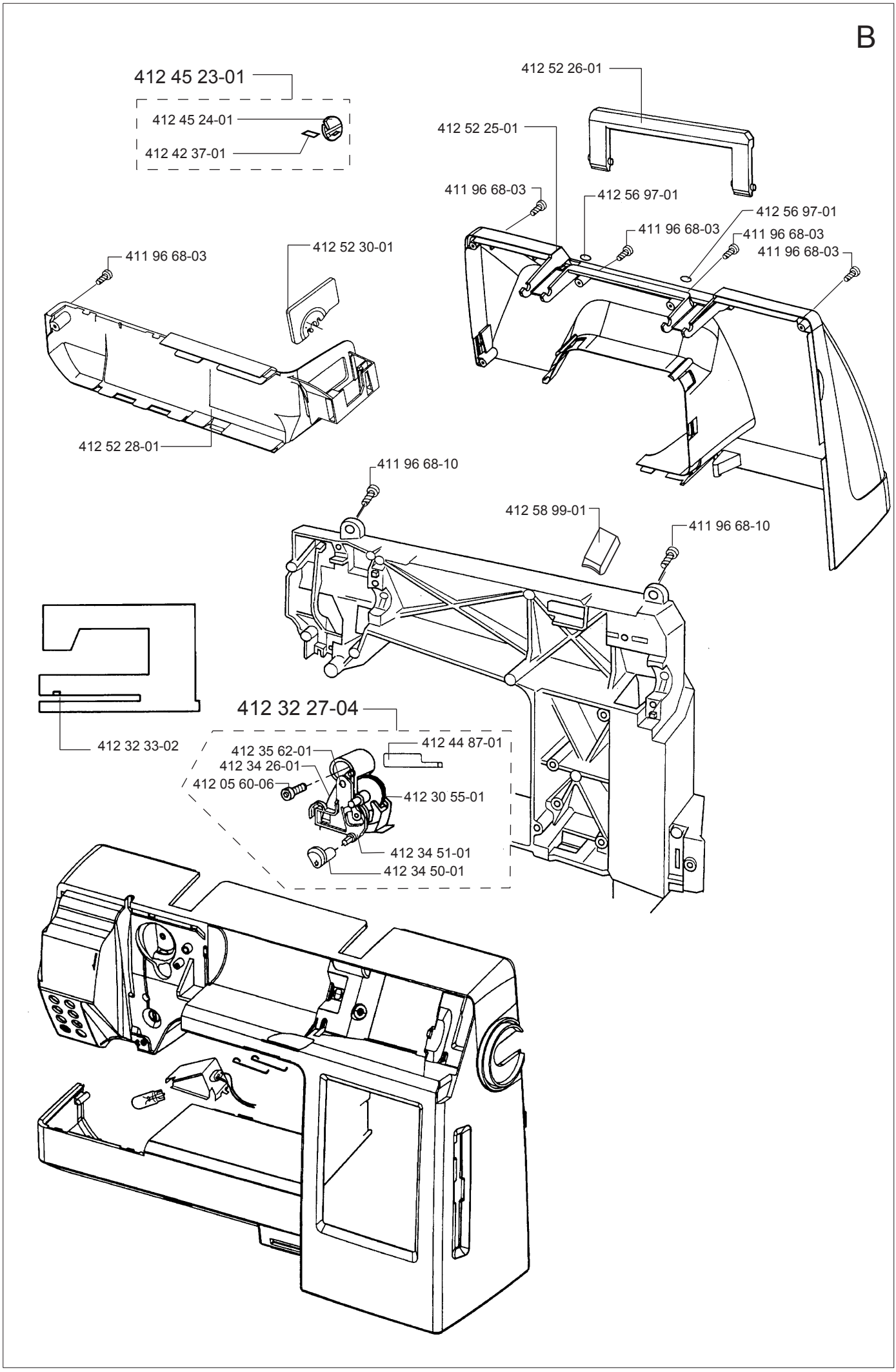
B
412 45 23-01
412 45 24-01
412 42 37-01
412 52 26-01
412 52 25-01
411 96 68-03
412 56 97-01
412 56 97-01
411 96 68-03
411 96 68-03
411 96 68-03
411 96 68-03
412 52 30-01
412 52 28-01
411 96 68-10
412 58 99-01
411 96 68-10
412 32 33-02
412 32 27-04
412 35 62-01
412 44 87-01
412 34 26-01
412 05 60-06
412 30 55-01
412 34 51-01
412 34 50-01

C

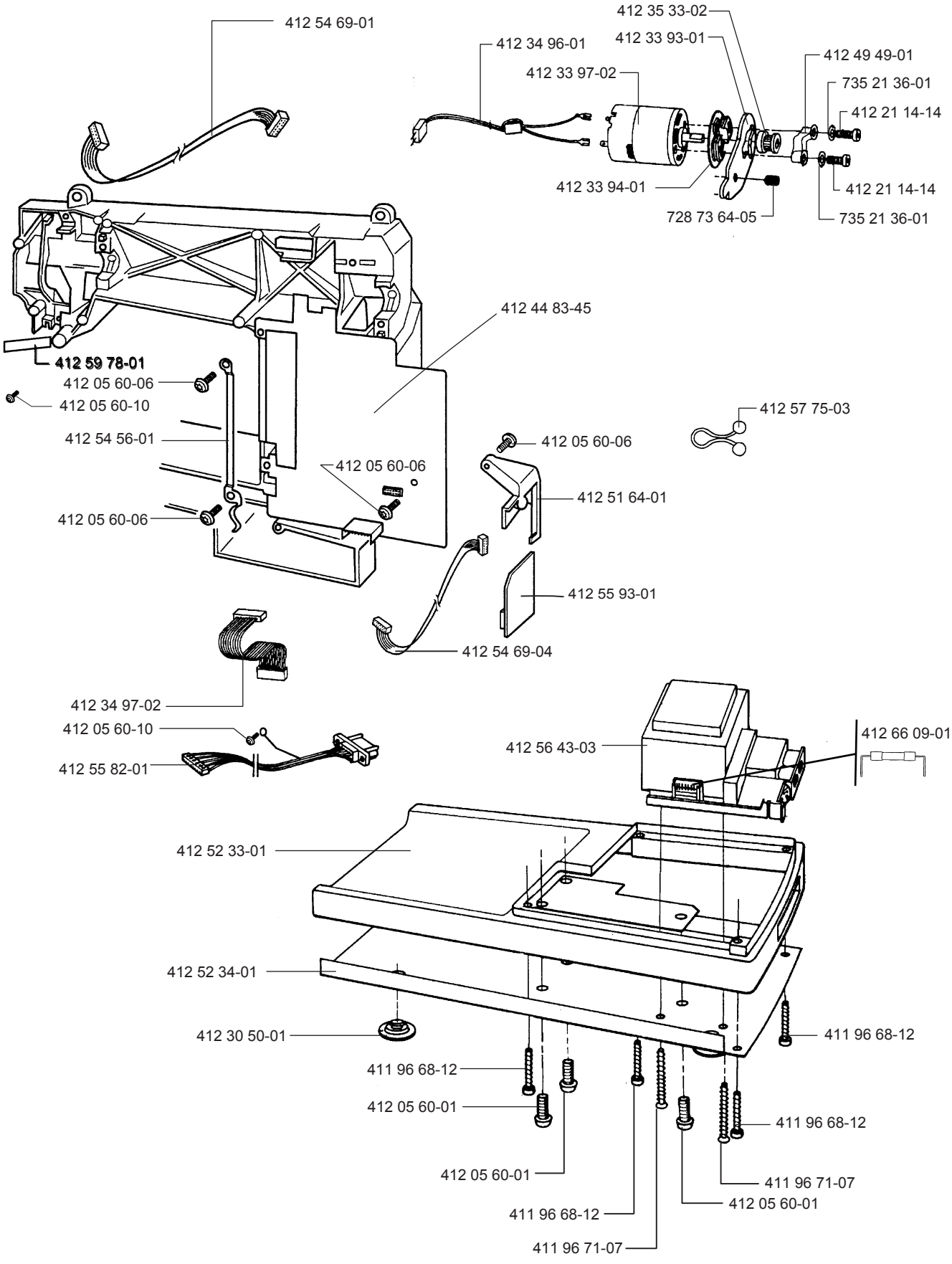
412 54 69-01
412 35 33-02
412 33 93-01
412 34 96-01
412 49 49-01
412 33 97-02
735 21 36-01
412 21 14-14
412 33 94-01
412 21 14-14
728 73 64-05
735 21 36-01
412 44 83-45
412 59 78-01
412 05 60-06
412 05 60-10
412 57 75-03
412 54 56-01
412 05 60-06
412 05 60-06
412 51 64-01
412 05 60-06
412 55 93-01
412 54 69-04
412 34 97-02
412 05 60-10
412 66 09-01
412 56 43-03
412 55 82-01
412 52 33-01
412 52 34-01
412 30 50-01
411 96 68-12
411 96 68-12
412 05 60-01
411 96 68-12
412 05 60-01
411 96 71-07
411 96 68-12
412 05 60-01
411 96 71-07

D

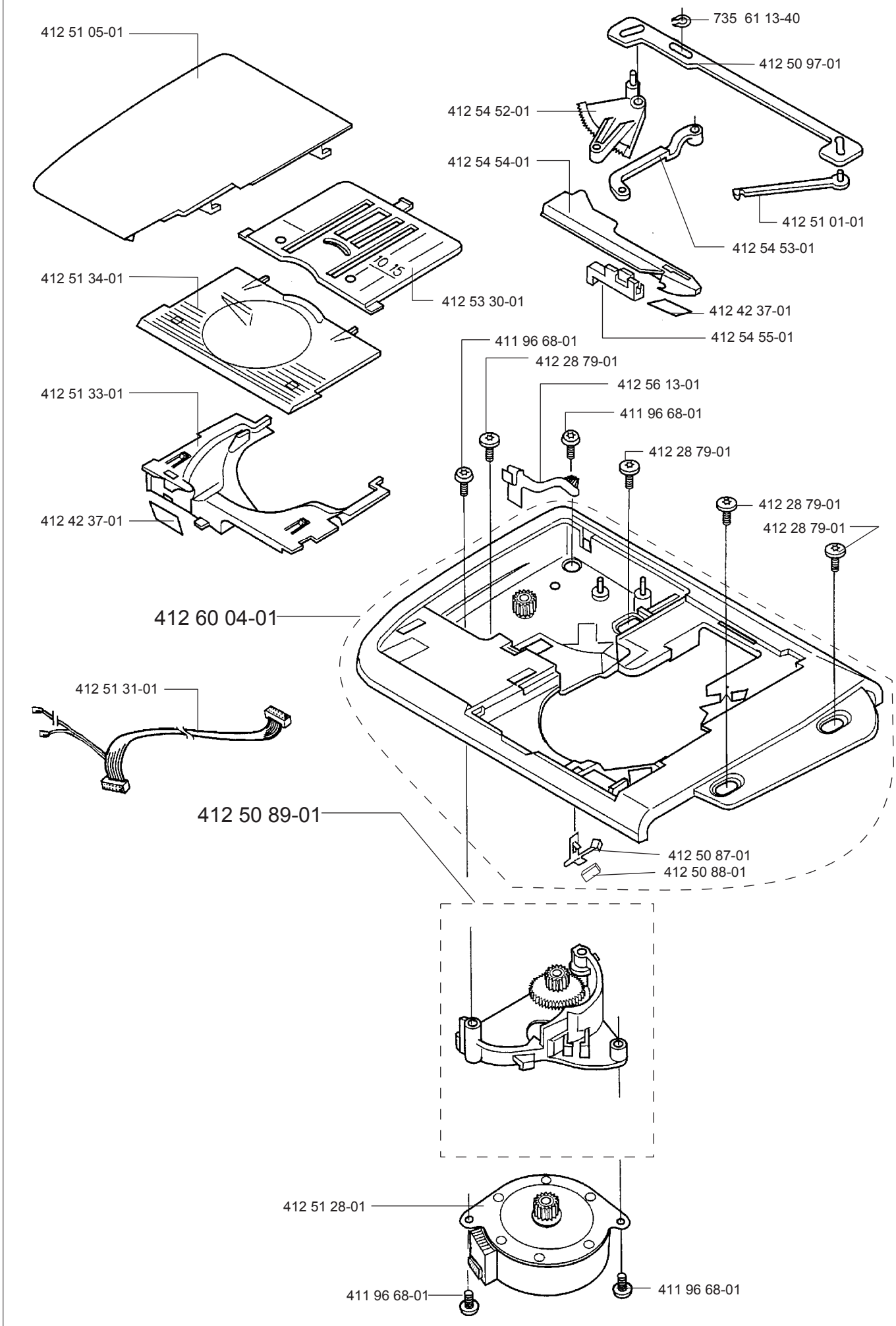
412 51 05-01
735 61 13-40
412 50 97-01
412 54 52-01
412 54 54-01
412 51 01-01
412 54 53-01
412 51 34-01
412 53 30-01
412 42 37-01
412 54 55-01
411 96 68-01
412 28 79-01
412 56 13-01
411 96 68-01
412 51 33-01
412 28 79-01
412 28 79-01
412 42 37-01
412 28 79-01
412 60 04-01
412 51 31-01
412 50 89-01
412 50 87-01
412 50 88-01
412 51 28-01
411 96 68-01
411 96 68-01

E

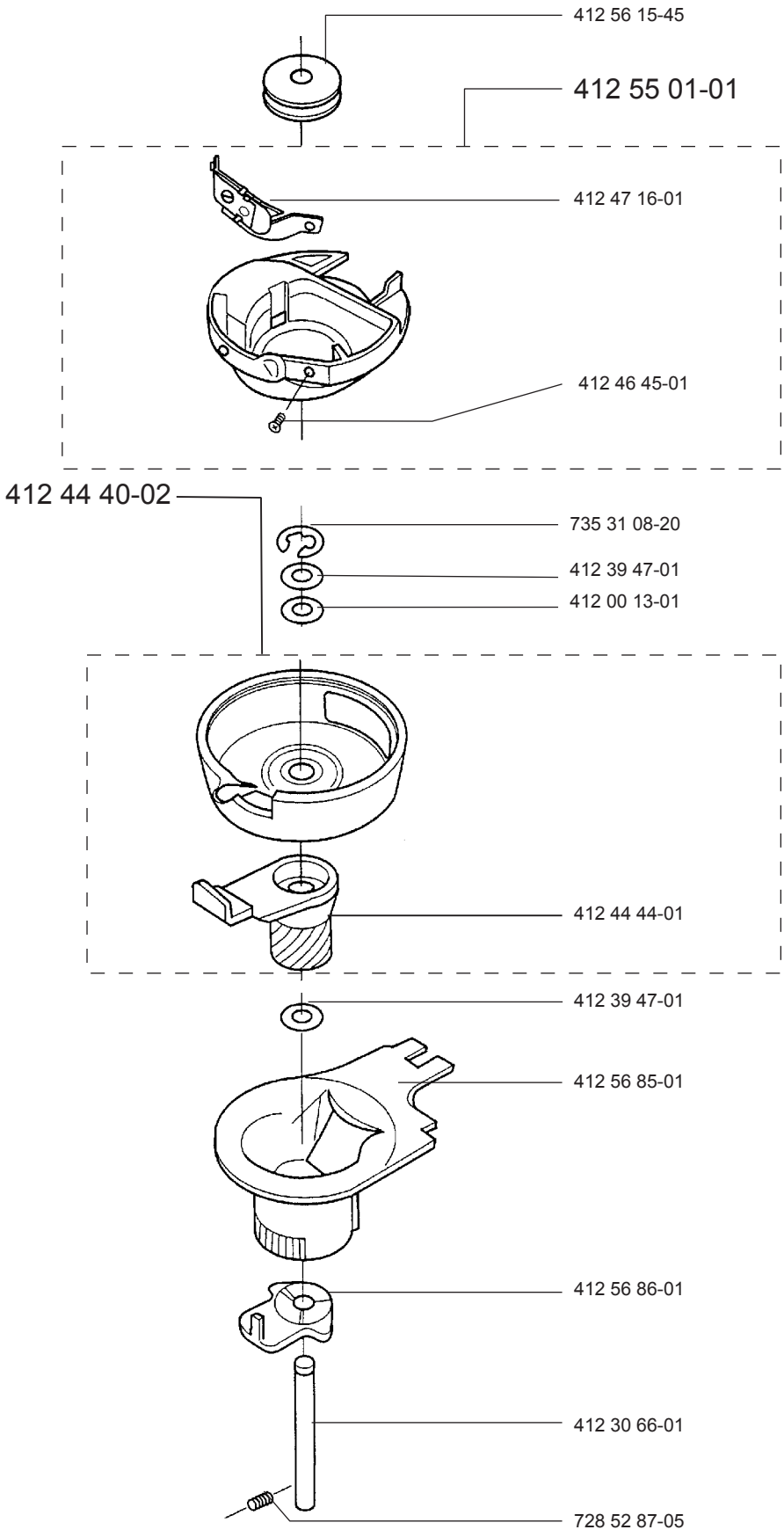
412 56 15-45
412 55 01-01
412 47 16-01
412 46 45-01
412 44 40-02
735 31 08-20
412 39 47-01
412 00 13-01
412 44 44-01
412 39 47-01
412 56 85-01
412 56 86-01
412 30 66-01
728 52 87-05

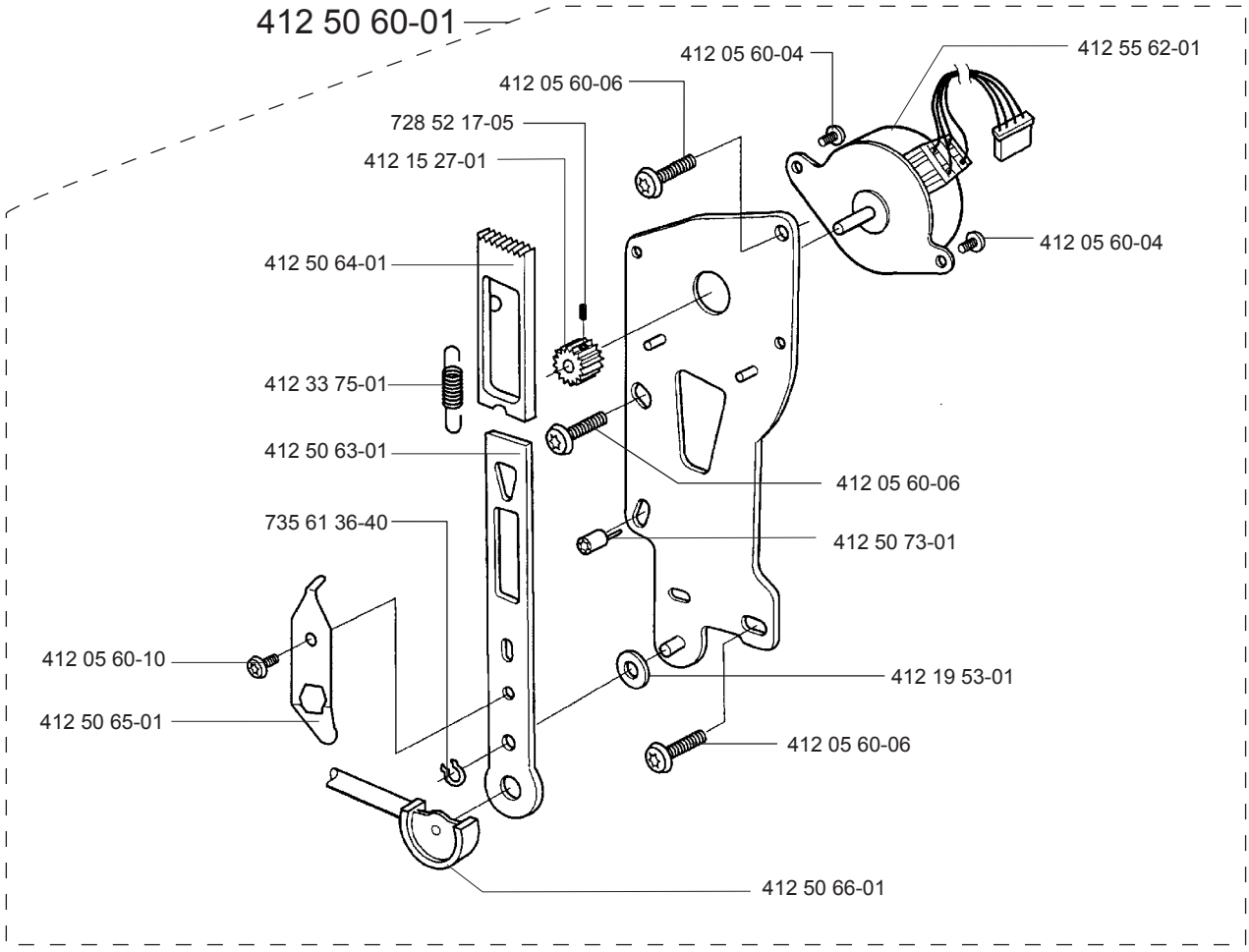
412 50 60-01
F
412 05 60-04
412 55 62-01
412 05 60-06
728 52 17-05
412 15 27-01
412 05 60-04
412 50 64-01
412 33 75-01
412 50 63-01
412 05 60-06
735 61 36-40
412 50 73-01
412 05 60-10
412 19 53-01
412 50 65-01
412 05 60-06
412 50 66-01

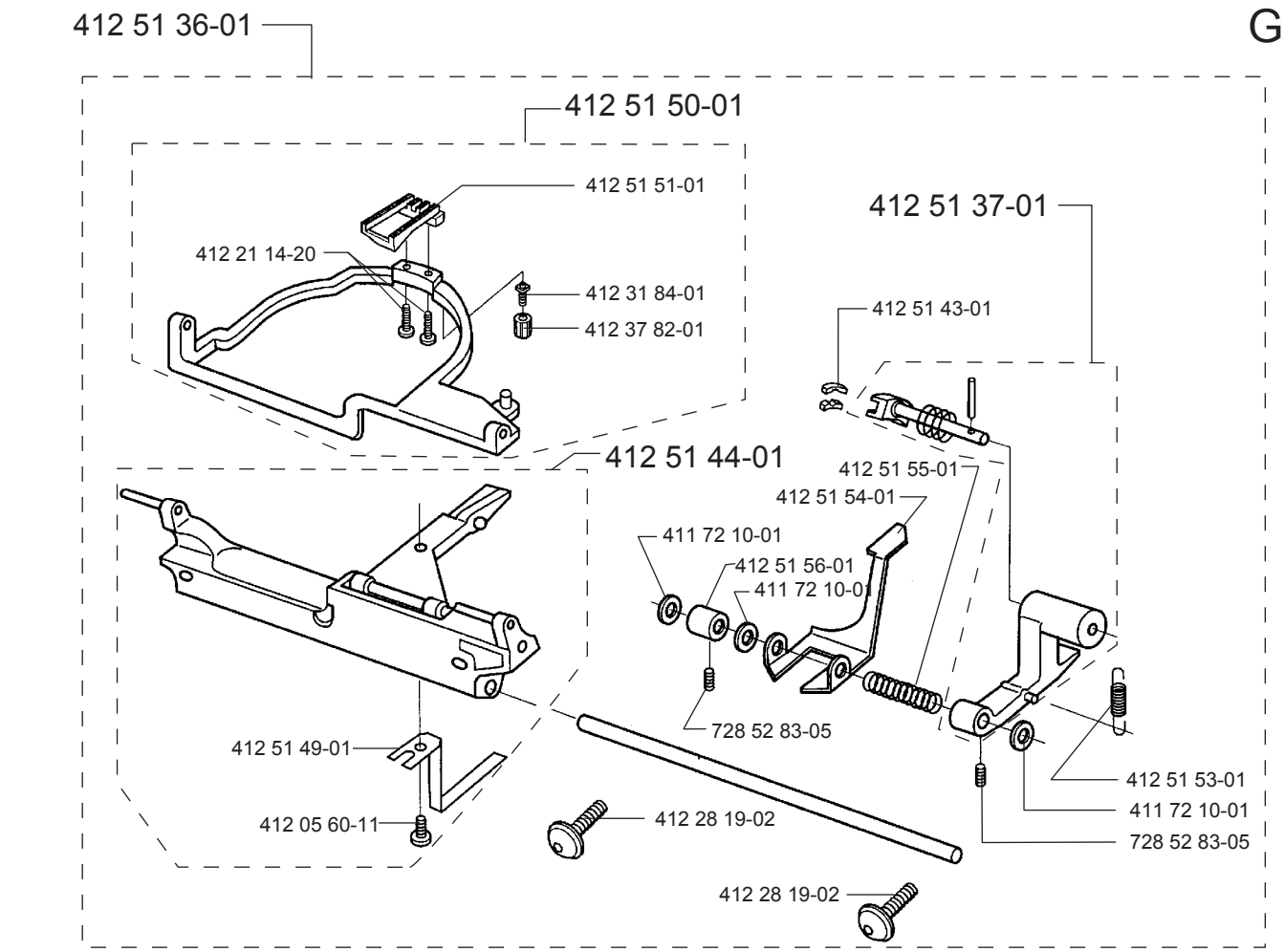
412 51 36-01
G
412 51 50-01
412 51 51-01
412 21 14-20
412 31 84-01
412 37 82-01
412 51 37-01
412 51 43-01
412 51 44-01
412 51 55-01
412 51 54-01
411 72 10-01
412 51 56-01
411 72 10-01
728 52 83-05
412 51 49-01
412 51 53-01
411 72 10-01
728 52 83-05
412 05 60-11
412 28 19-02
412 28 19-02

H

412 54 02-01

412 34 88-01

725 52 20-05

412 50 72-01

412 22 98-01

412 05 60-04

412 05 60-04

412 54 10-01

412 54 06-01

412 62 91-01

412 54 07-01

412 32 34-09

721 41 69-70

412 05 60-06

412 34 85-01

728 52 17-05

412 54 08-01

412 34 81-01

412 34 82-01

I

412 05 60-06

412 31 81-01

412 51 68-01

721 41 87-70

721 42 10-10

721 41 87-70

728 82 83-05

412 53 03-01

412 34 60-01

412 51 63-01

412 35 26 01

412 51 70-01

412 51 69-01

728 82 83-05

412 35 42-01

412 32 84-01

412 05 60-06

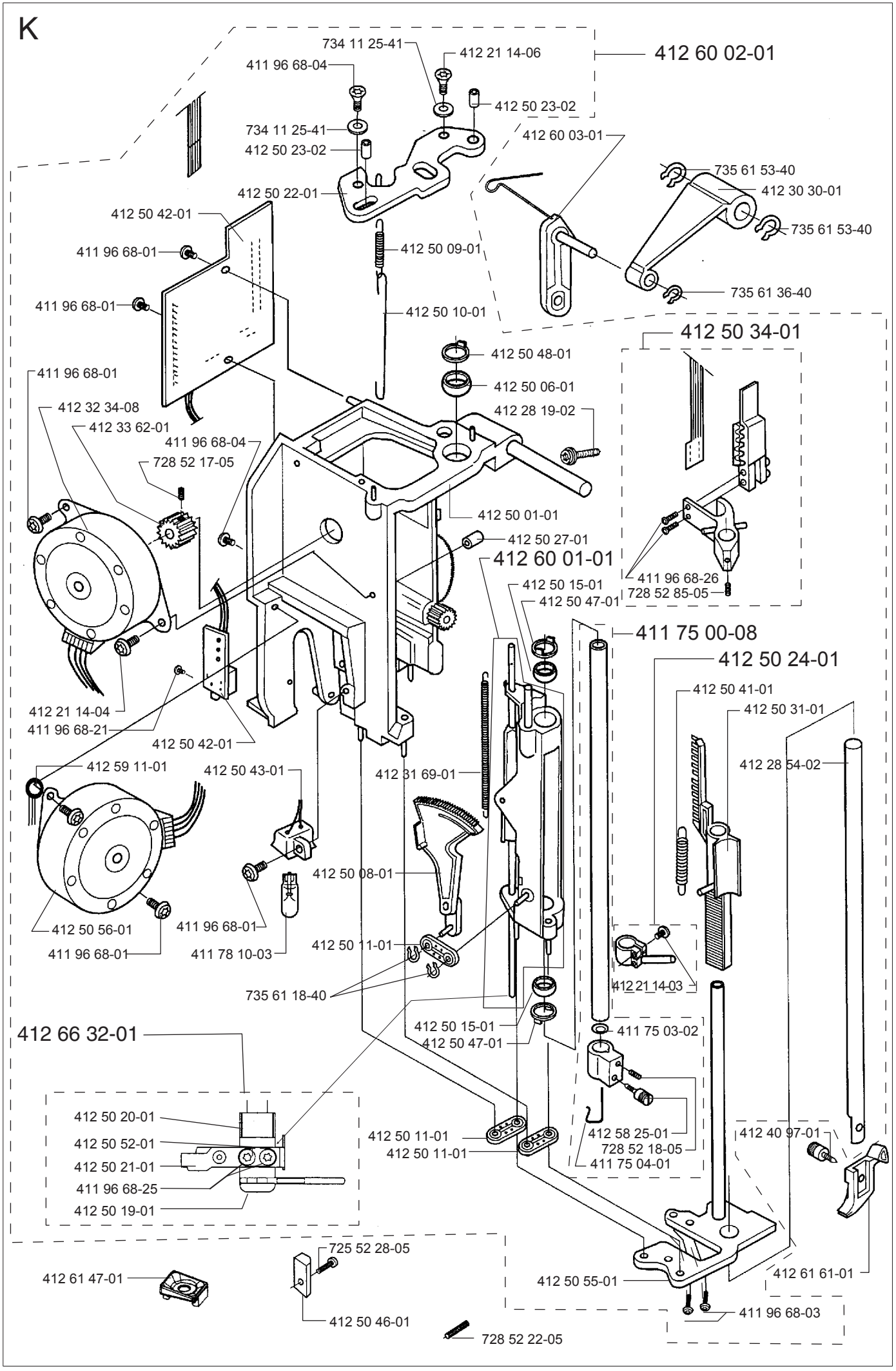
K
412 60 02-01
734 11 25-41
412 21 14-06
411 96 68-04
412 50 23-02
734 11 25-41
412 50 23-02
412 60 03-01
735 61 53-40
412 30 30-01
735 61 53-40
412 50 22-01
412 50 42-01
412 50 09-01
411 96 68-01
735 61 36-40
411 96 68-01
412 50 10-01
412 50 34-01
412 50 48-01
411 96 68-01
412 50 06-01
412 32 34-08
412 28 19-02
412 33 62-01
411 96 68-04
728 52 17-05
412 50 01-01
412 50 27-01
412 60 01-01
411 96 68-26
728 52 85-05
412 50 15-01
412 50 47-01
411 75 00-08
412 50 24-01
412 50 41-01
412 50 31-01
412 21 14-04
411 96 68-21
412 50 42-01
412 28 54-02
412 59 11-01
412 50 43-01
412 31 69-01
412 50 08-01
412 50 56-01
411 96 68-01
411 96 68-01
411 78 10-03
412 50 11-01
412 21 14-03
735 61 18-40
412 50 15-01
412 50 47-01
411 75 03-02
412 66 32-01
412 50 20-01
412 50 52-01
412 50 21-01
411 96 68-25
412 50 19-01
412 50 11-01
412 50 11-01
412 58 25-01
728 52 18-05
411 75 04-01
412 40 97-01
725 52 28-05
412 61 47-01
412 50 55-01
412 61 61-01
412 50 46-01
411 96 68-03
728 52 22-05

L

412 36 83-03

412 32 84-01

412 05 60-06

412 55 84-01

412 36 87-01

412 30 09-02

728 53 20-05

412 30 07-01

721 41 87-70

728 73 20-01

412 31 79-01

412 30 06-01

412 30 08-01

728 53 20-05

728 82 83-05

735 58 55-00

412 34 54-01

412 36 84-01

728 82 83-05

412 32 84-01

412 05 60-06

412 55 84-01

M

412 60 05-02

735 31 05-00

412 51 90-01

412 54 69-03

412 51 89-01

412 51 95-01

412 45 38-01

412 61 31-01

412 61 33-01

412 61 39-02

411 96 75-01

412 52 14-01

412 54 97-01

412 54 98-01

412 55 81-01

412 59 01-01

728 52 17-05

412 51 97-02

735 58 23-00

412 60 10-01

411 96 68-05

412 60 06-01

412 55 48-01

411 96 68-25

411 96 68-25

412 51 91-01

412 51 94-01

412 51 92-01

412 54 48-01

411 96 68-05

N

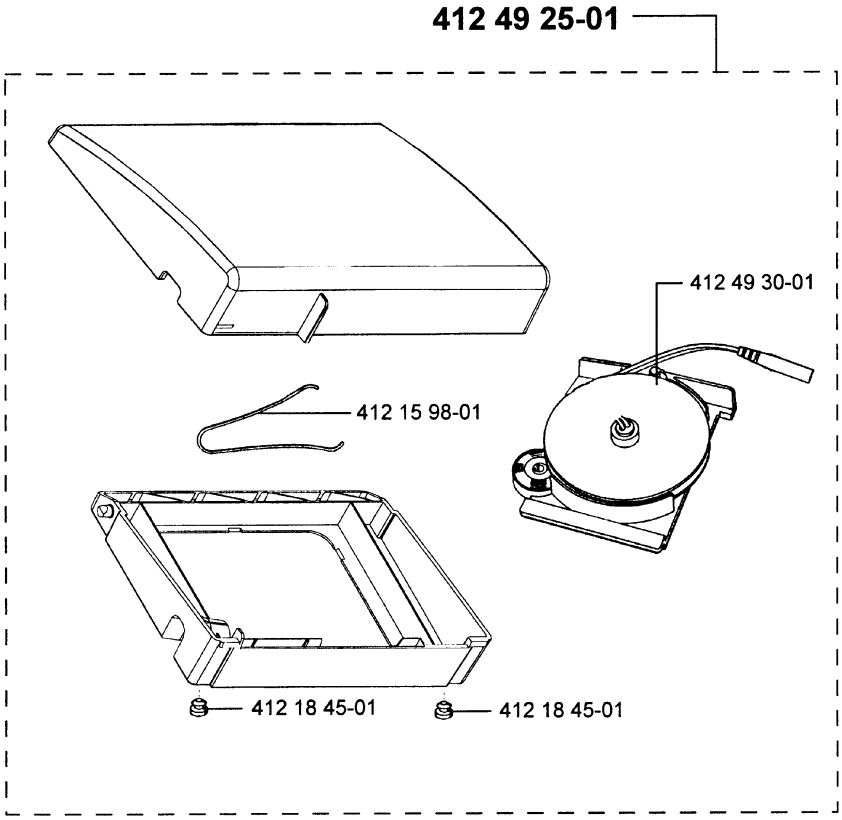

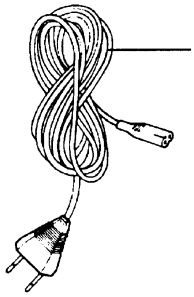

412 15 78-01 220 V
412 15 79-03 120 V
412 15 81-01 Australia

O

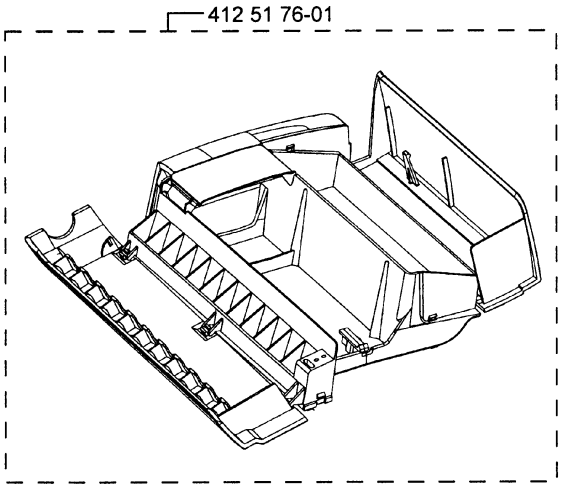

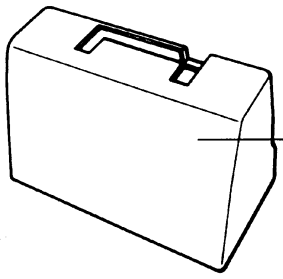

412 52 92-01

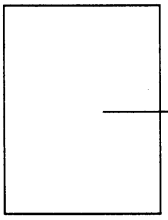

412 39 09-14
Bruch, bobbins,
Presserfeet etc

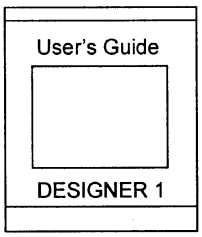

412 55 88-01 Users Guide Swe
412 55 88-06 Users Guide Den
412 55 88-11 Users Guide Fin
412 55 88-21 Users Guide Nor
412 55 88-26 Users Guide Eng
412 55 88-31 Users Guide Fra
412 55 88-36 Users Guide Dutch
412 55 88-41 Users Guide Ita
412 55 88-46 Users Guide Spa
412 55 88-51 Users Guide Ger
412 55 88-56 Users Guide Rus

A

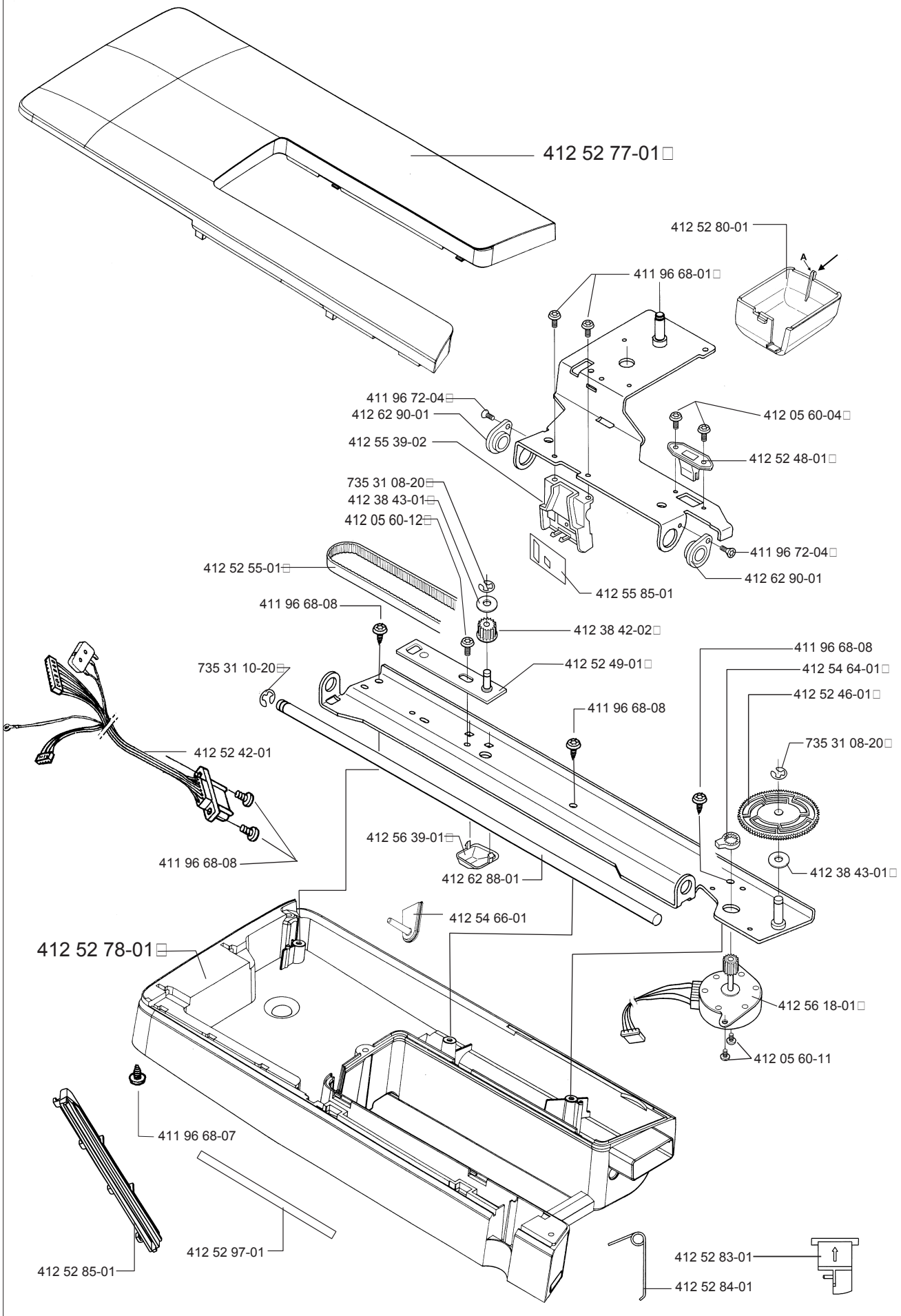
412 52 77-01
412 52 80-01
A
411 96 68-01
411 96 72-04
412 62 90-01
412 55 39-02
412 05 60-04
412 52 48-01
735 31 08-20
412 38 43-01
412 05 60-12
411 96 72-04
412 62 90-01
412 52 55-01
412 55 85-01
411 96 68-08
412 38 42-02
411 96 68-08
735 31 10-20
412 52 49-01
412 54 64-01
412 52 46-01
411 96 68-08
735 31 08-20
412 52 42-01
412 56 39-01
411 96 68-08
412 62 88-01
412 38 43-01
412 54 66-01
412 52 78-01
412 56 18-01
412 05 60-11
411 96 68-07
412 52 97-01
412 52 85-01
412 52 83-01
412 52 84-01

B

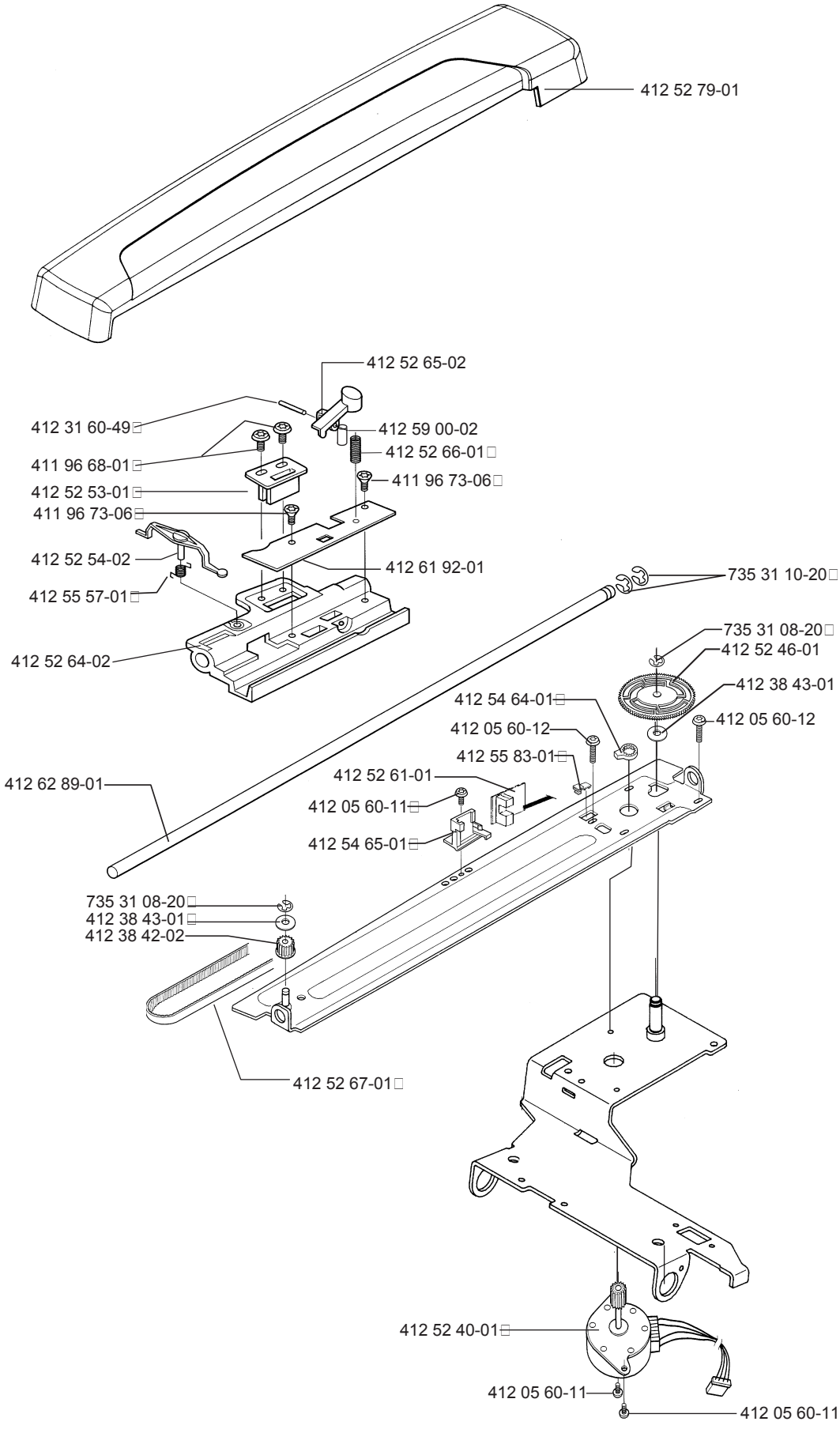
412 52 79-01
412 52 65-02
412 31 60-49
412 59 00-02
412 52 66-01
411 96 68-01
411 96 73-06
412 52 53-01
411 96 73-06
412 52 54-02
412 61 92-01
735 31 10-20
412 55 57-01
735 31 08-20
412 52 46-01
412 52 64-02
412 38 43-01
412 54 64-01
412 05 60-12
412 05 60-12
412 55 83-01
412 52 61-01
412 62 89-01
412 05 60-11
412 54 65-01
735 31 08-20
412 38 43-01
412 38 42-02
412 52 67-01
412 52 40-01
412 05 60-11
412 05 60-11

C

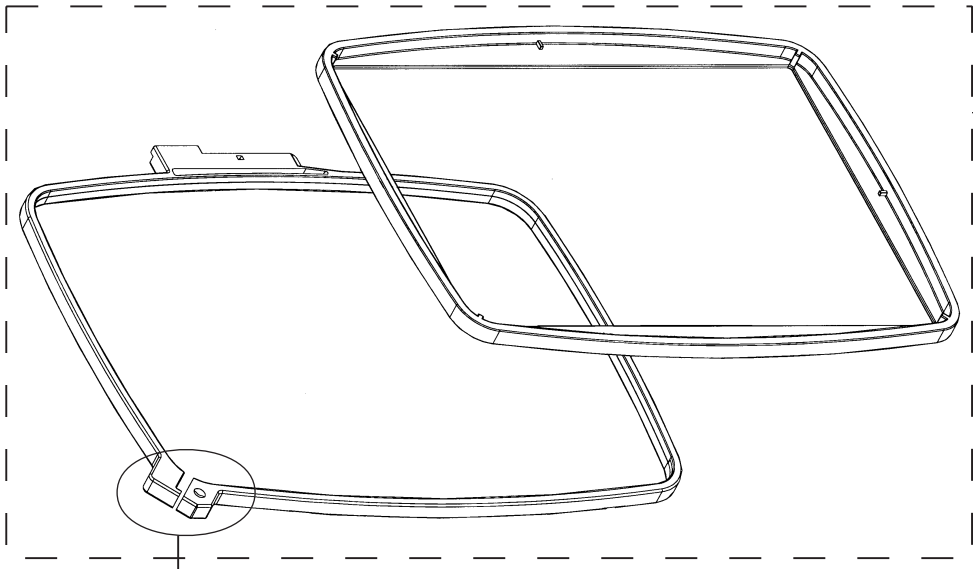

412 52 71-02

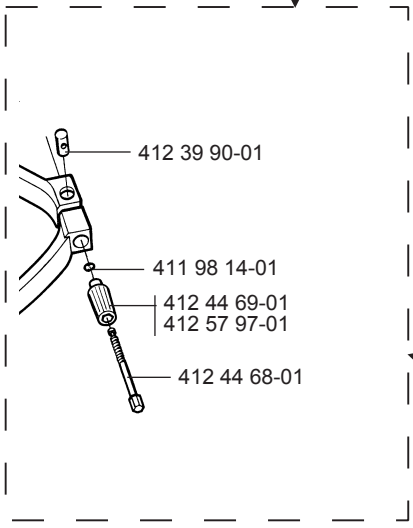

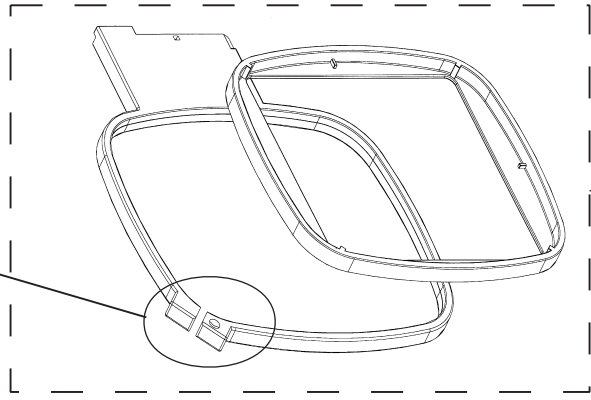

412 52 74-01

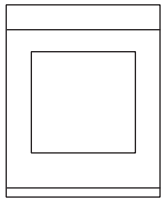

412 53 73-01
Designer 1
Embroidery
100 Booklet

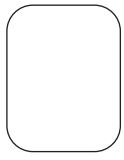

412 53 74-01
Templet
100x100

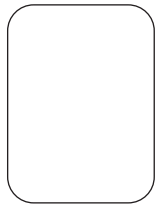

412 53 75-01
Templet
150x240

412 56 58-01
Zipper bag

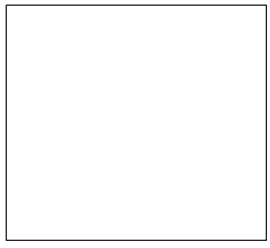

412 56 54-01
Accessories
Siccer, Thread,
Fabrics , R - foot

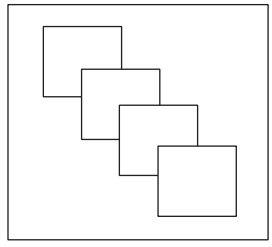

412 60 71-01
Embroidery #100
Palace script
Clarendon
Calligraphy

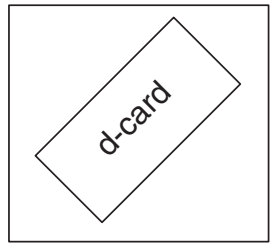

d-card 100-1
412 64 89-01
d-card 100-2
412 64 89-02

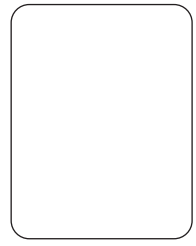

412 51 78-01
Embroidery box