PFAFF

creative 2144

german engineering

Service Manual and Test program

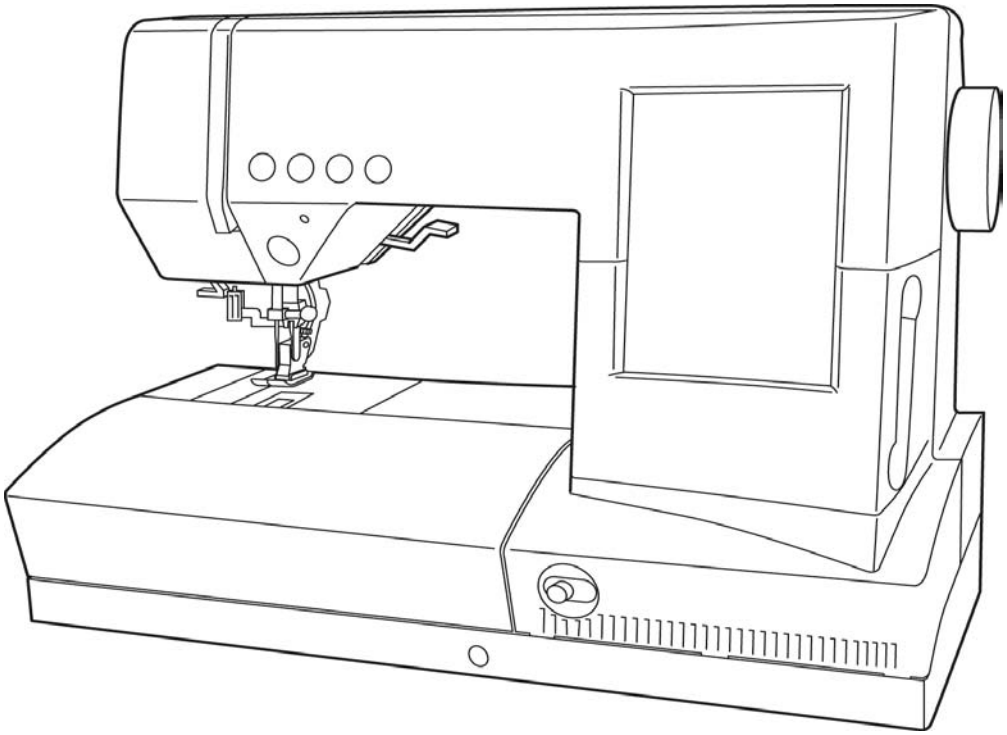

1st Edition September 2003

	Page
Contents	3
Foreword	6
Gauges and service tools	8
Notes on the sewing machine	9
Specifications	10
Removing the housing covers	12
Feeding system	
1. Adjustment of toothed belt tension	19
2. Adjustment of feed rock shaft in sideways direction	20
3. Timing the feed motion	24
4. Adjustment of feed dog in sideways direction	28
5. Adjustment of feed dog height	30
6. Adjustment of synchronizer	32
7. Adjustment of the presser foot height	34
8. Adjustment of top feed foot in sewing direction	36
9. Adjustment of top feed height	38
10. Adjustment of the embroidery foot height	40
Zigzag mechanism	
11. Adjustment of needle in needle plate slot	42
Stitch forming parts	
12. Position of needle in needle plate slot, in sewing direction	45
13. Adjustment of hook-to-needle clearance	48
14. Adjustment of bevel gears	50
15. Hook timing	52
16. Adjustment of needle bar height	54
17. Adjustment of bobbin case position finger	56
18. Adjustment of the thread cutter stop	57
Stitching off	
19. Adjustment of needle threader	58
20. Adjustment of bobbin thread tension	60
21. Adjustment of needle thread tension	62
22. Adjustment of thread check spring stroke	64
23. Adjustment of equal forward and reverse stitch length	66
24. Making sewing sample	69

Repair Instructions

25. Removing and fitting needle thread tension 70
26. Removing and fitting sewing hook 72
27. Cleaning and oiling machine 72
28. Changing hook drive belt 74
29. Changing bevel gears 80
30. Changing bottom circuit board 86
31. Removing front housing shell 88
32. Changing main circuit board 92
33. Changing display with the touch-screen 94
34. Changing circuit board of the control panel 95
35. Changing circuit board 96
36. Fitting the front housing shell 98
37. Changing synchronizer circuit board 102
38. Changing motor 104
39 Changing cable reel in the foot control 106
40. Changing the upper stepping motor 108
41. Changing the lower stepping motor 110
42. Changing transverse-feed stepping motor 112
43. Changing buttonhole sensor 114
44. Changing free-arm cover 116
45. Changing the needle threader 118
46. Changing thread puller 120
47. Changing knife 122
48. Exchanging the bobbin motor and SC motor unit 124
49. Adjusting the toothed rocker 130

Upgrade of the creative 2144

1. Upgrade with a special Boot PCMCIA memory card 134
2. Upgrade from a PC via a serial interface on the machine 135
Calibrating the Touch panel of the creative 2144 136
Calibrating the knee lift potentiometer of the creative 2144 137

Important special functions of the creative 2144

Version number and status 138
Programmed patterns 138
Options for messages 139
Emergency reset 139
Display of operating times of creative 2144 140
Adjustment of upper thread tension in embroidery mode 140

Machine test

Test program 141

Test start

Display and LED's 142
Keys 142
Touch panel 143
Signal generator 143
Feed dog 144
Foot control 144

Stepping motors

Sewing unit 146
Thread tension and presser foot unit 146
Embroidery unit 146
Thread tension 147
Bobbin winding motor 147
Presser foot lift 148
Buttonhole control 148
Synchronizer 149
Machine motor 150
Needle stop down 150
Bobbin thread monitor 151
Overload protection 152
Thread cutter 152
Memory cards 153
PC interface 154

All tests 155
Test end / Test result 155
50. Troubleshooting table for the creative 2144 156

Foreword

The purpose of this service manual is to assist you in quick and correct repair of the machines.
Adjustments should only be made if the settings deviate from the requirements described herein.
When checking or adjusting a machine, always proceed in the order of the worksteps prescribed.
For easier reference every workstep is marked with a dot.
The indications „left“, „right“, „top“, „bottom“, „front“ and „back“ always refer to the upright machine with the controls facing the operator.
When assembling dismantled machines, adjust the machine to approximately the right settings.
This facilitates the subsequent fine adjustments.
Unless otherwise specified, the handwheel must always be turned forward.
When carrying out maintenance work on live parts or in their proximity, the machine is to be separated from the power supply by disconnecting the lead cord from the electrical socket.

ESD

Warning!

It is of utmost importance to be careful to protect electronic parts from electrostatic discharge (ESD).
To prevent this from happening, circuit boards must be handled in a controlled way.

Always use strap 412 23 02-01 for maintenance work.

For the proper adjustment of the machine, the following gauges and tools are required:

• Needle-rise gauge	61-111200-02
• Needle-rise clamp	61-111600-35
• Spacer	63-102600-18
• Adjustment gauge for bobbin case position finger	61-111621-15
• Presser foot gauge	63-114690-39
• Pin gauge	63-112120-08
• Bridge gauge	63-112120-08
• Allan key 1.5 mm	07-433005-28
• Fork wrench 6.0/7.0 mm	07-433000-10
• Torx screwdriver TX 6	07-434008-40
• Torx screwdriver TX 8	07-434008-41
• Torx screwdriver TX 10	07-434008-44
• Torx screwdriver TX 15	07-434008-45
• Torx screwdriver TX 20	07-434008-46
• Torx screwdriver TX 25	07-434008-47
• Torx offset screwdriver TX 15	07-434008-74
• Circlip fitting tool 2.3 kz	07-437003-20
• Circlip fitting tool 3.2 kz	07-437003-30
• Circlip fitting tool 4.0 kz	07-437003-40
• Circlip fitting tool 5.0 kz	07-437003-50
• Circlip fitting tool 6.0 kz	07-437003-60
• Circlip pliers A1	07-438000-50
• Spring hook	07-437006-00

Subject to alterations in design and dimensions.

Notes on the sewing machine with regard to ambient conditions, treatment, cleaning and safety

Ambient conditions:

The recommended ranges are:

Ambient temperature 10° to 40°C (50° to 104°F)
Air humidity 20 % to 80 %

This machine is a high-quality electro-mechanical device. It is designed for household purposes and should always be supervised when in use.
Make sure that it is not subjected to:
dust, severe dampness, direct sunlight, static electricity, heat-producing objects, corrosive chemicals or liquids.
The machine must be used on a firm and even surface which is open for ventilation purposes.

Treatment:

Always protect the machine from damage caused by hitting or dropping.

Cleaning:

Housing:
To clean the housing, use a dry, clean, soft, lint free cloth. To remove particularly persistent dirt, use a soft cloth with a neutral cleansing agent for plastic materials.

Please note!
Do not use any insecticides or chemical products such as petrol (gas) or liquid chemicals to clean the housing.

Display:
If necessary, clean display with a soft cloth moistened with a little water.

Safety:
1. The machine must be put into operation according to the indications on the specification plate.
2. Do not place any objects in the openings on the machine.
3. Do not use the sewing machine if:
- there is visible damage,
- Its function is defective,
- it is wet, e.g. with condensation.
4. Do not pull the mains plug out of the socket by its cord.
5. If this appliance is used for another purpose than that intended, or if it is wrongly operated, we cannot accept any liability for any damage caused.
6. To avoid the risk of electric shock, do not open the machine. There are no parts inside the machine which the user can repair. This is solely the responsibility of our qualified service staff.
7. Be sure to use only original PFAFF parts.

Specifications of the PFAFF creative 2144

- Electronic free-arm machine for utility and embroidery stitches
- Electronic stitch pattern storage
- Data memory 512 KBYTES
- Memory retains its data even when the machine is turned off
- 16/32-Bit computer with ROM 1 KBYTES
- Memory I with 4MBYTES Flash program memory, loadable via PC-card plug-in-unit
- Memory II with 2 MBYTES
- Zigzag stitch width = 0 to 9 mm with 45 full steps or 90 half steps
- Feed length = 0 to 6 mm forwards and 0 to 6 mm reverse with a total of 60 full steps or 120 half steps
- A full step is 0.2 mm and a half step 0.1 mm and a quarter step 0.05 mm
- 19 different needle positions can be set
- One 7.5° stepping motor for sideways needle bar movement (constant current switching controller)
- One 7.5° stepping motor for feed control (constant current switching controller).
- One 7.5° stepping motor for thread tension (constant current switching controller).
- One 7.5° stepping motor for presser foot lifter (constant current switching controller).
- One 7.5° stepping motor for transverse feed motion (constant current controller).
- Transverse feed amount of 1 mm each to the right and left, with 30 full steps each.
- 2-track synchronizer with speedometer
- Electronically controlled take-up lever „up“ (needle „up“ positioning) or needle „down“ position with LED indicator
- Sew slow button with illuminated LED indicator for half speed (540 r.p.m.)
- Thread cutter button
- Reverse sewing button
- Bobbin thread monitor with LED indicator
- Digital motor control with 60 to 1100 r.p.m.
- Several pattern-dependent reduced speeds in addition
- Graphic LC color display with _ VGA
- When machine is blocked, an anti-blocking device switches the motor off automatically after 1 to 3 seconds
- High-ohm foot control (cold) with automatic-rewind cable
- FM radio and TV screened, approval marking, suppression degree B
- Safety-class II with CE and SEV test markings
- Master switch for motor, electronics and LED’s.
- Glare-free built-in sewing lamp (indicator lamp) 12 V 5W
- Bobbin winding possible during sewing due to separate motor with stabilization and anti-blocking device
- Pendulum-type needle bar frame
- Transmission of drive from arm shaft to lower shaft by toothed belt, transmission ratio 1:1
- Power input rating: 120 W when sewing at 1000 r.p.m.; 50 W when stationary
- 2 drives for PC cards (memory cards)
- Embroidery unit attachable/detachable
- Needle thread monitor
- Sensors for feed-dog lowering mechanism and presser foot lifter

- Lockstitch of types 301, 302, 303, 304, 305, 308 and all other variants obtainable by sideways needle movement or forwards and reverse control of the machine feed
- PFAFF transverse double-rotating hook
- Link take-up lever
- Slide block regulator for forwards and reverse stitch lengths.
- Dual feed
- Disengageable feed dog
- Drive from motor to handwheel by flat-toothed belt
- Sintered metal bearings
- Oil for sintered metal bearings: BP Energol HLP 46 or HLP 80 No. 28-036550-09
- Clear workspace: 173, 113, 203 mm
- Machine height. 277 mm.
- Baseplate dimensions: 386, 153 mm
- Free-arm dimensions: 76, 49, 196 mm
- Housing material: light metal
- Weight of sewing head: 8.640 kg
- Needle system 130/705 H

- Additional needle system classifications:

Twin needle	Suffix = Zwi
Wing needle	Suffix = Wing
Twin hem stitching needle	Suffix = Zwi-Ho
Top stitch needle	Suffix= N
Stretch needle	Suffix = PS
Jeans needle	Suffix = J

- Possible needle points:

Small ball point	Suffix = SES
Medium ball point	Suffix = SUK
Large ball point	Suffix = SKF
Very pointed round point	Suffix = J
Leather point right hand	Suffix = LR
Leather point left hand	Suffix = LL

Specifications of built-in motor of the PFAFF 2144

Nr. 92-329945-91 24V 50W 80000 r.p.m.

Removing the housing covers

Note:

Before adjusting or repairing the machine, make sure to remove the housing covers as described in this manual.

- Disconnect the machine's main plug.
- Remove needle and presser foot.
- Remove detachable work support.
- Remove top cover.
- Remove the two Torx screws of housing insert.
- Remove housing insert.
- Remove (Loosen) fastening screw 1 of the standard cover (fig. 1).
- Lay machine on its back
- Remove the three fastening screws of baseplate.
- Carefully tilt the baseplate forward.
- Remove standard cover carefully.

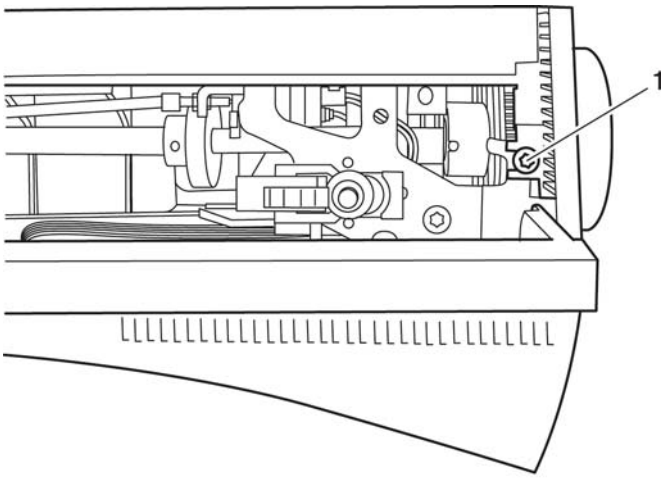

Fig. 1

- Raise latch 2 only 1 to 2 mm (fig. 2).
- Disconnect the two-wire plug 3 of flat cable for thread cutter from the pin socket.
- Disconnect flat cable 4 of the socket from the cable guides.
- Raise latch 5 only 1 to 2 mm.
- Disconnect the double connection plug 6 of motor cable from the pin socket.

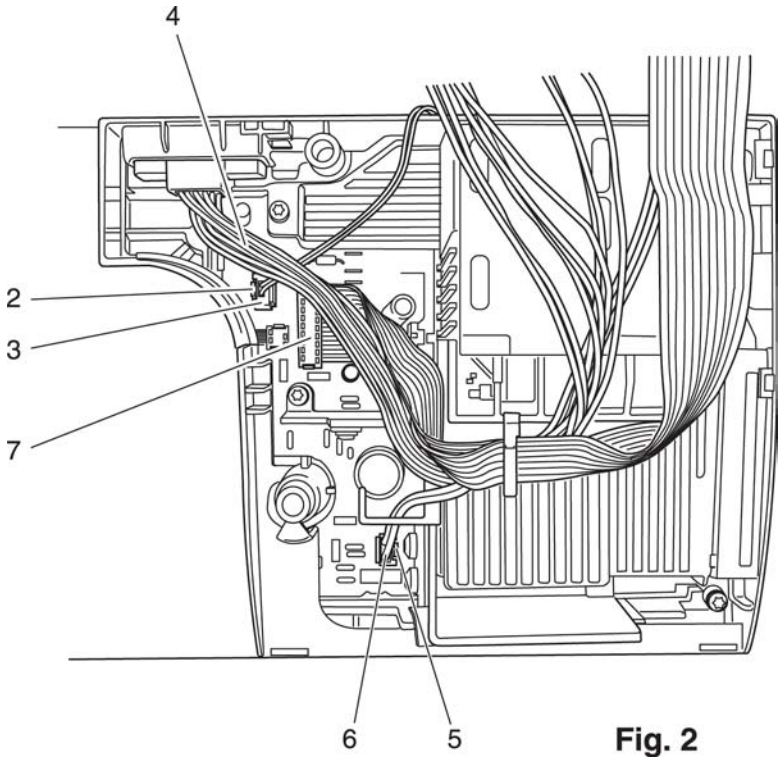

Fig. 2

- Disconnect plug 7 of the flat cable from the circuit board.
- Remove (loosen) fastening screw 8 of ground strap 9 (fig. 3).
- Remove ground strap 9 by lifting it.
- Remove plug 4a of the connection cables from the circuit board.
- Place the whole baseplate aside.

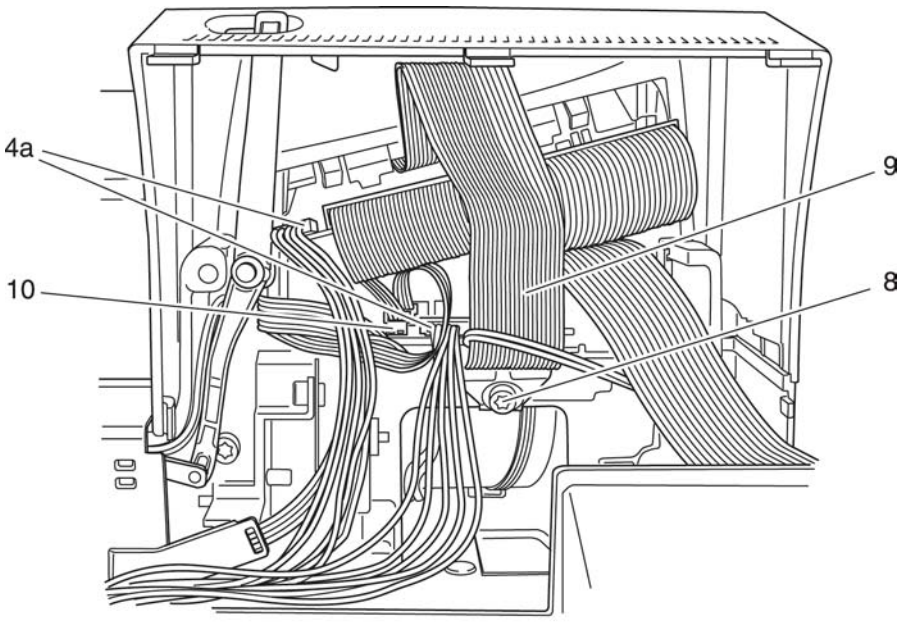

Fig. 3

- Disconnect plug 10 of the free-arm cover from the circuit board (fig. 4).
- Disconnect plugs 11 and 12 of the connection cables.
- Remove the two fastening screws 13 of free-arm cover (fig. 5).
- Bring the feed dog lowering mechanism to its normal working position (fig. 4).
- Disengage both switch levers 14 with a small screwdriver.
- Remove the free-arm cover.
- Remove the needle plate.

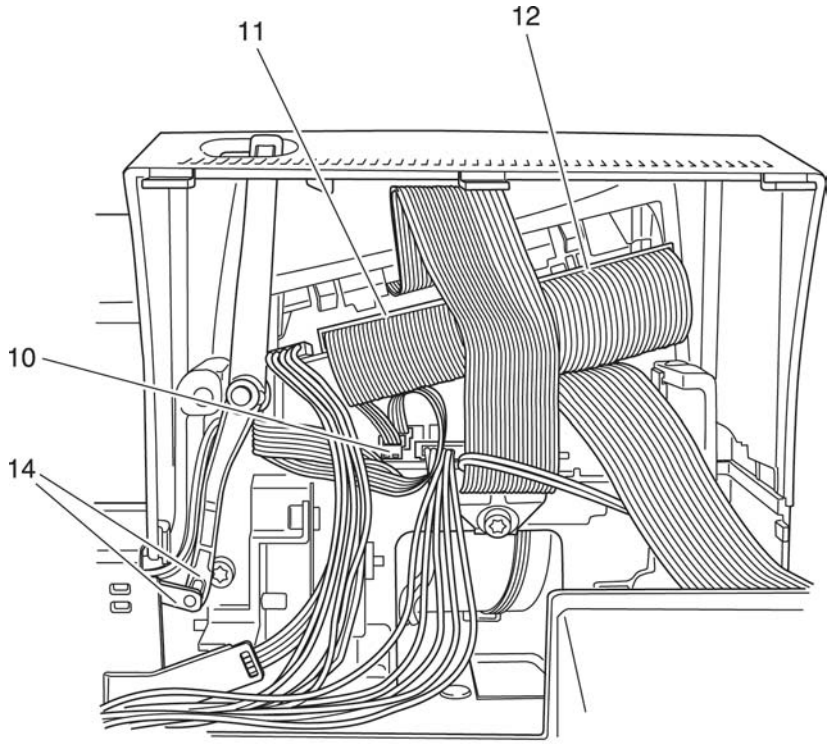

Fig. 4

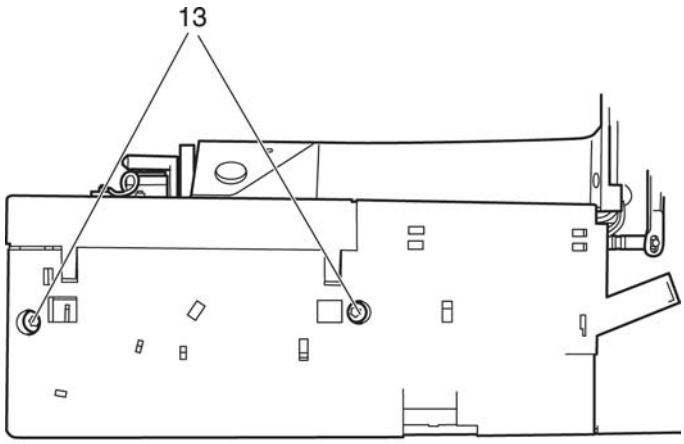

Fig. 5

- Remove the two fastening screws 15 (fig. 6).
- Remove the upper free-arm cover.
- Loosen the fastening screw of the face cover.
- Carefully place aside the complete face cover as well as the sewing lamp and the cable (fig. 7).
- Loosen fastening screw 16.
- Remove the sewing lamp and the cable from the guide.
- Remove the face cover.

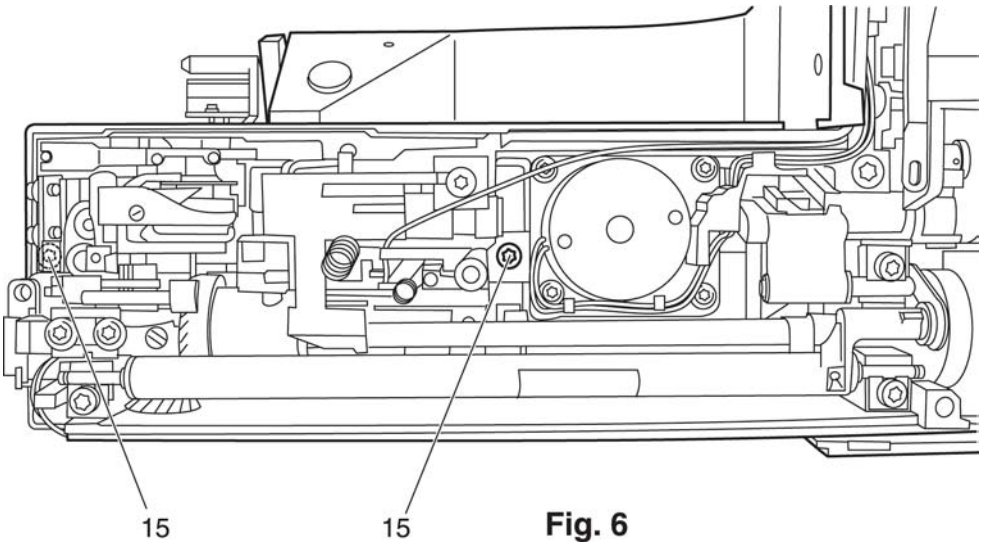

Fig. 6

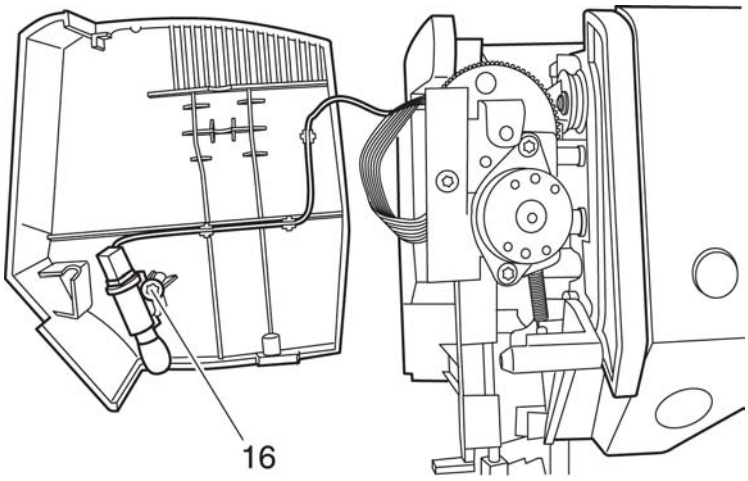

Fig. 7

- Loosen the four fastening screws 17 to 20 (fig. 8).
- Loosen the snap connections by pressing with your thumb on the spots marked with arrows on the inner surface of the arm. (fig. 9)
- Lightly raise the front housing shell and remove the two-connection plug of the connection cable.
- Carefully remove the complete front housing shell.

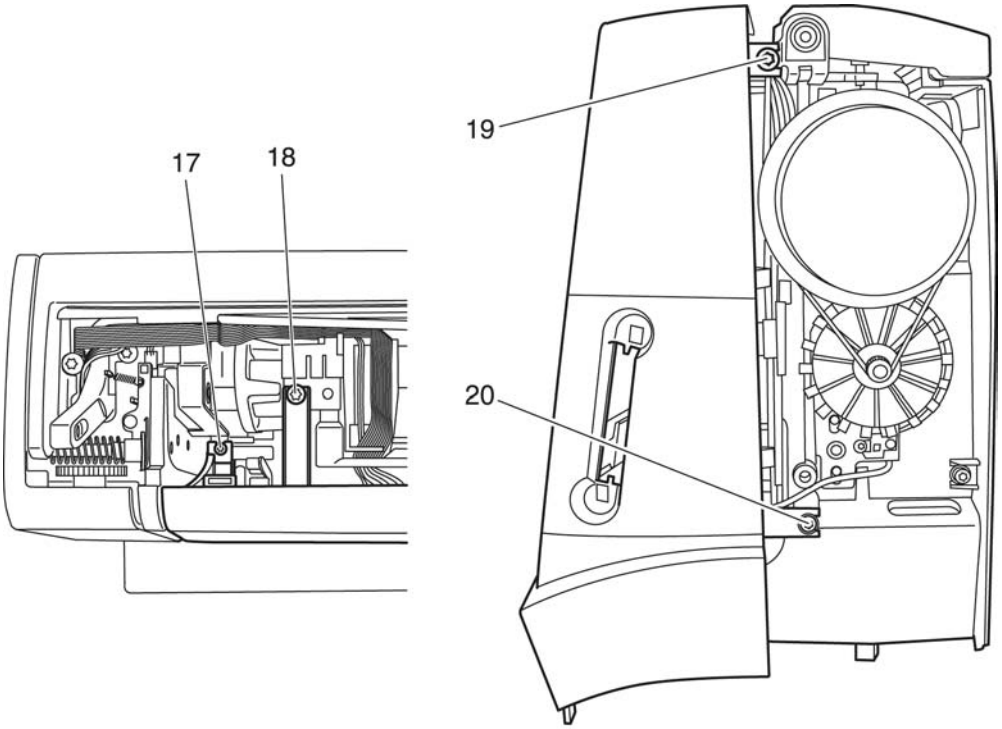

Fig. 8

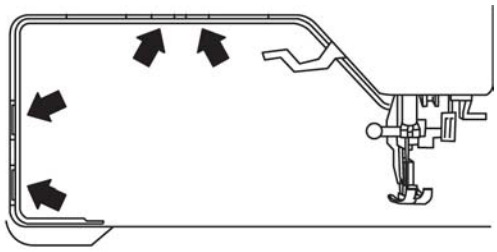

Fig. 9

- Disconnect the eleven connection plugs 21 to 31 of the flat cables from the circuit board (fig. 10).
- Remove the two fastening screws 32.
- Raise latch 33 of circuit board bracket 34 only 1 to 2 mm and remove the whole circuit board.
- Remove the four fastening screws 35 of circuit board bracket 34.
- Lightly raise circuit board bracket 34 and remove the flat cables from the guides.
- Remove the circuit board bracket.
- Loosen fastening screws 36 and 37 (fig. 11).
- Remove the rear housing shell.

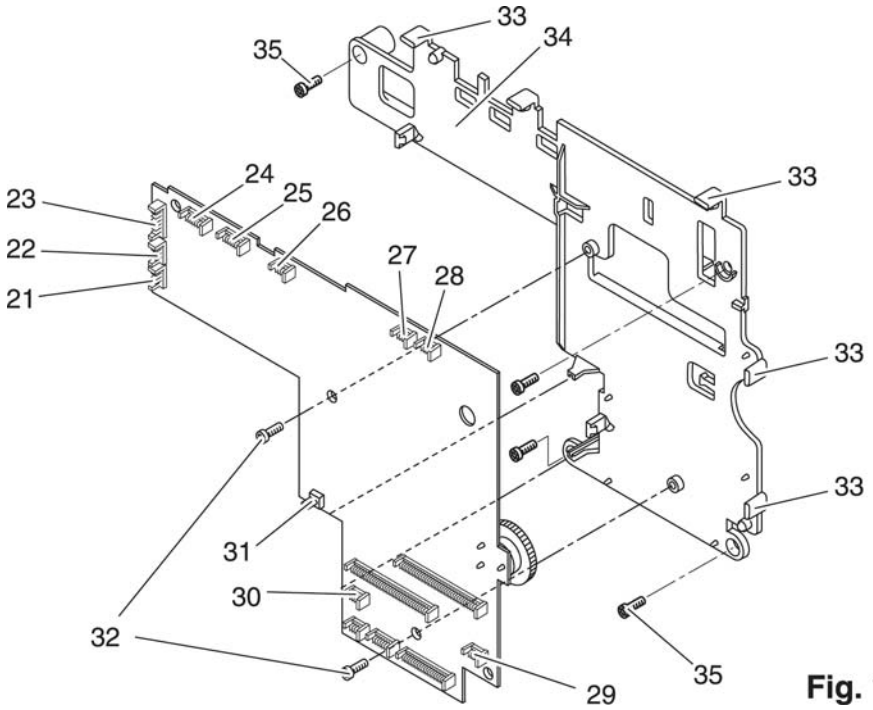

Fig. 10

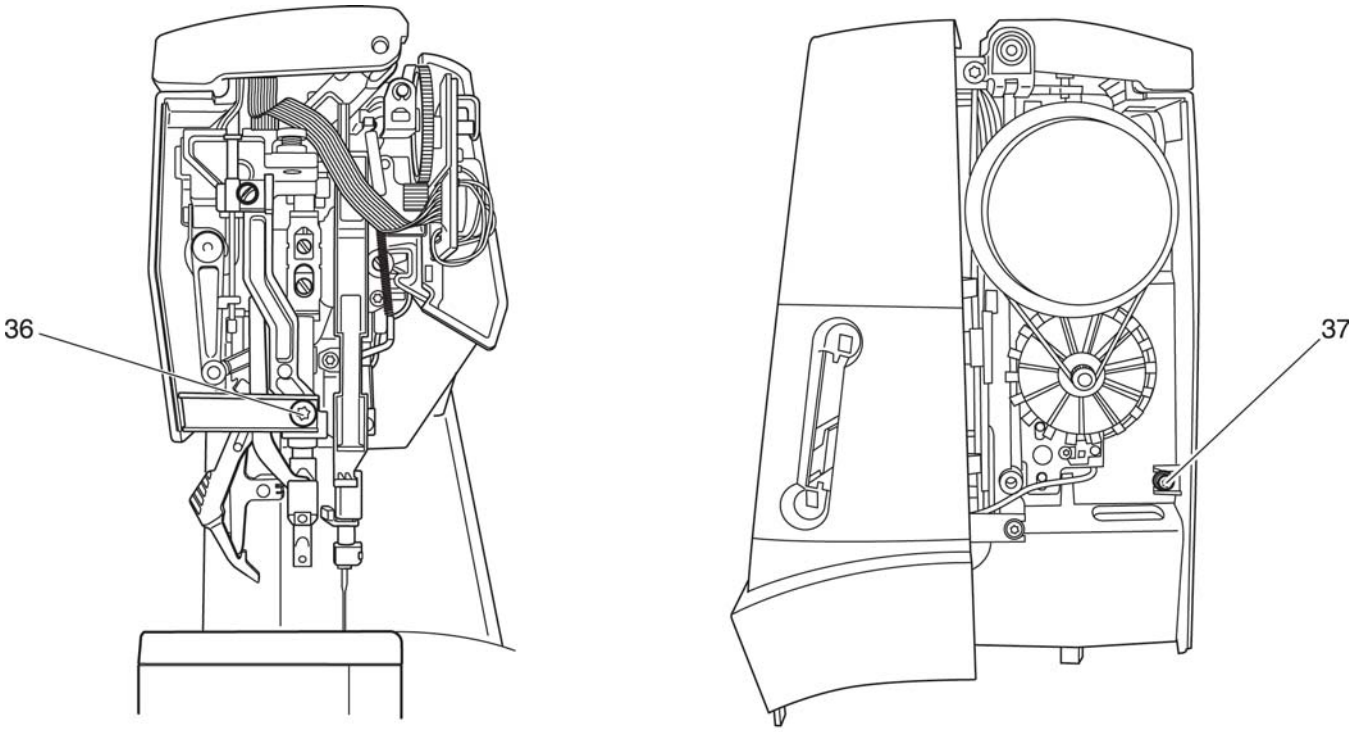

Fig. 11

Notes

Feeding system

1. Adjustment of hook drive belt tension

Requirement:

The hook drive belt must be so taut that the sewing hook has no play in its sense of rotation, but it must be possible to turn the machine easily.

Adjustment:

- Loosen screw 1 (fig. 1).
- Re-position tensioning roller 2 with a screwdriver as required.
- Tighten screw 1.

Check:

- Check adjustment according to the „Requirement“.
- Press lightly against middle of hook drive belt
- The belt must move 1 to 3 mm forwards (fig. 1).

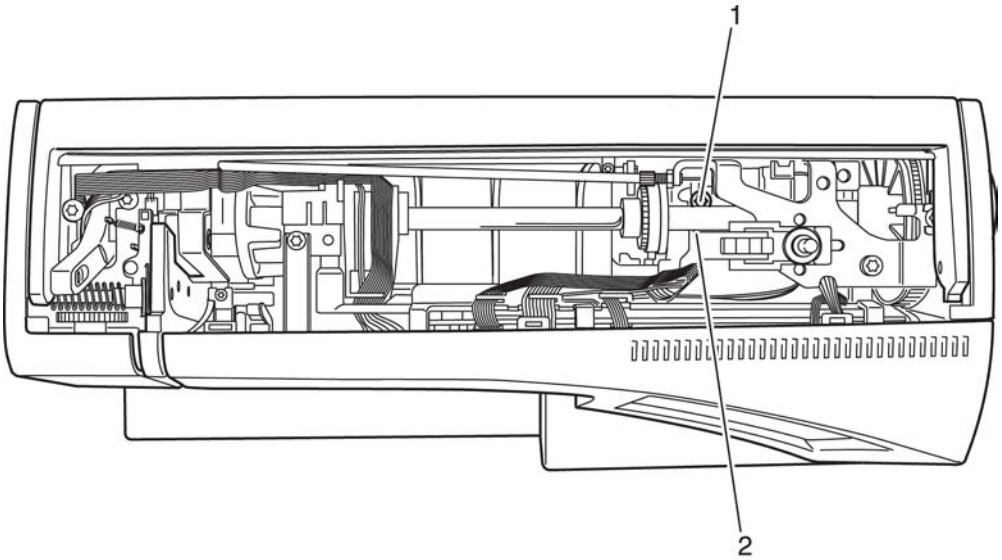

Fig. 1

2. Adjustment of feed rock shaft in sideways direction

Requirement:

The clearance between feed rock shaft bushing 4a and left housing edge 3a must be 3.0 mm (fig. 2a).

Check:

It must be possible to insert the spacer 61-111621-15 easily, but without play, between the feed-dog driving shaft and the left housing edge.

Note:

This adjustment must only be carried out when compelling reasons exist.

Adjustment:

- Disconnect the machine's mains plug from the mains socket.
- Remove needle and presser foot.
- Tilt machine over backwards.
- Remove housing insert as described in this manual.
- Remove the transverse-feed stepping motor according to section 42
- Disconnect spring 14 (fig. 2b).
- Remove (loosen) screw 18.
- Turn the handwheel until the lobe of driving eccentric 20 faces rear.
- Fold cam lever 9 down and remove it with link 10 to the left, pulling them off the connecting bar rod.
- Remove slide block 12 with spring by pulling it to the right.
- Loosen screw 5a (fig. 2a).
- Pull out bolt 5c to the right.
- Loosen screws 3 and 7.
- Re-position driving shaft 5 together with the two cylindrical bolts 4 and 6 sideways without play, until there is a clearance of 3.0 mm at the left side, as described in „Requirement“ (fig. 2).
- Tighten screw 3.
- The pressure of the right cylindrical bolt must be 1 kg.
- Tighten screw 7.
- Fit bolt 5c without any play and tighten screw 5a.
- Disconnect spring 8.
- Remove needle plate.
- Use your finger to pull the feed dog to the front, then release it.
- The complete feed rock shaft 5 must slide slowly to the rear.
- Loosen screw 25 (fig. 2c).
- Move the complete top feed lever to the front and rear.

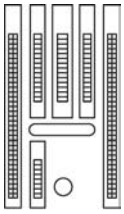

Fig. 2

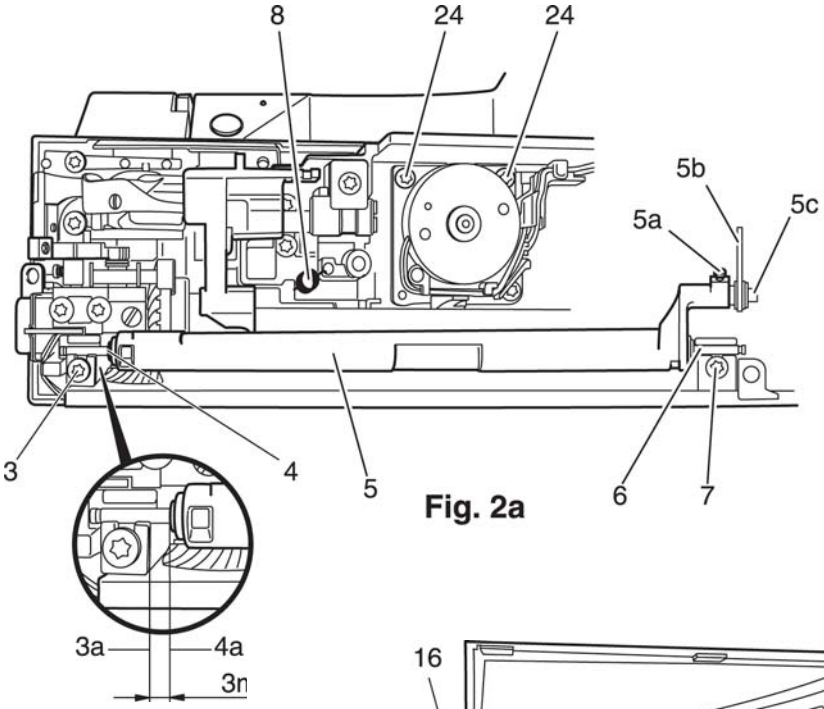

Fig. 2a

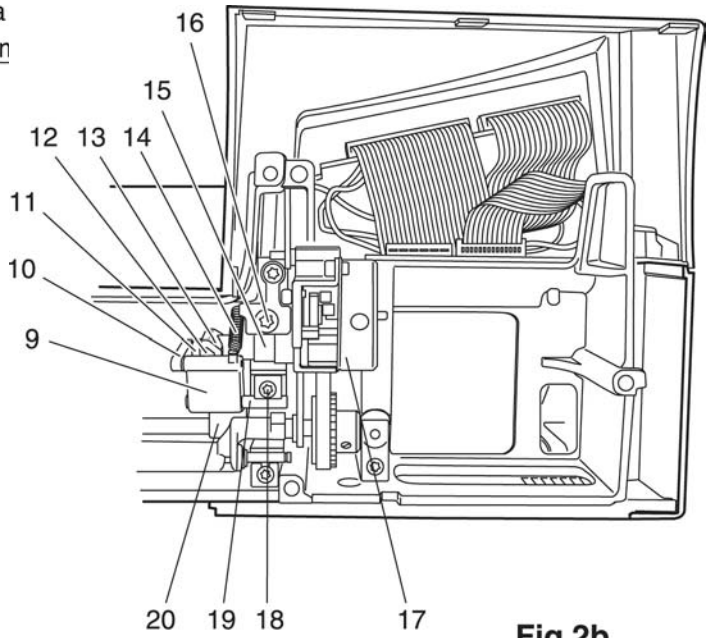

Fig 2b

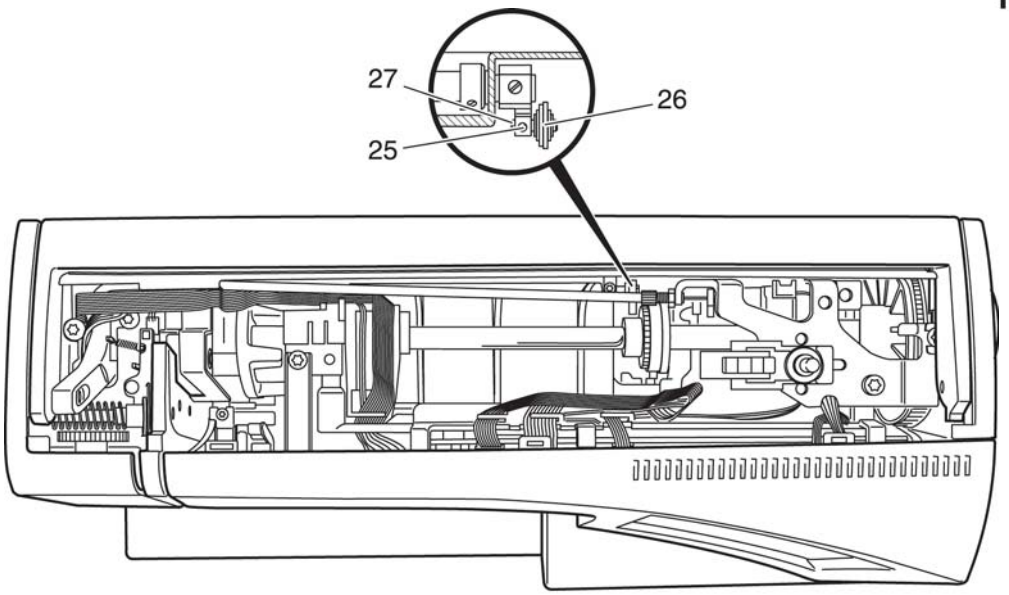

Fig. 2c

- The complete top feed mechanism must move easily and without binding (if necessary eliminate cause of binding).
- Re-position crank bolt 27 with pull rod 26 sideways until the complete top and bottom feed move easily.
- Tighten screw 25 and check again whether the feed system moves smoothly.
- Loosen screw 16 (fig. 2b).
- Push slide lever shaft 15 complete with stepping motor 17 about 1 mm to the right.
- Push slide block 12 with spring onto the bolt and insert it in slideway 13 in the correct curve radius.
- Check whether the slide block can be moved easily, but without play or binding, within the slideway.
- Push slide lever shaft 15 with stepping motor 17 carefully to the left, until there is a clearance of 0.05 mm between slide block 12 and connecting bar 11.
- Tighten screw 16 and check whether the slide block moves easily and without play.
- Push link 10 complete with cam lever 9 to the right onto the connecting bar pin.
- Push cam lever 9 to the rear, and then upwards over the feeding eccentric.
- Insert screw 18 in bolt 19 and tighten it slightly.
- Move bolt 19 sideways until link 10 and connecting rod 11 still have a slight play and move easily.
- Tighten screw 18.
- Connect the two springs 8 and 14 (fig. 2a and 2b).
- Check whether the tension spring 199 of the transverse-feed stepping motor is connected on the feed dog.
- Connect tension spring 199 on the transverse-feed stepping motor and fit it into the transverse-feed stepping motor.
- Lightly tighten the three screws 24 (fig. 2a).
- Apply needle plate.

Note:

Fit transverse-feed stepping motor as described in section 4.

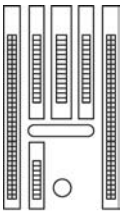

Fig. 2

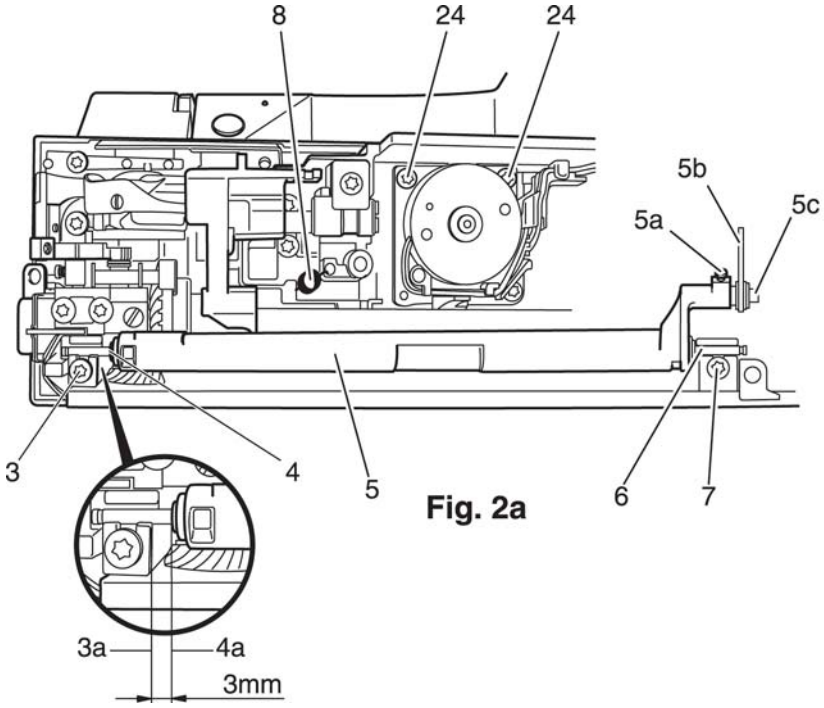

Fig. 2a

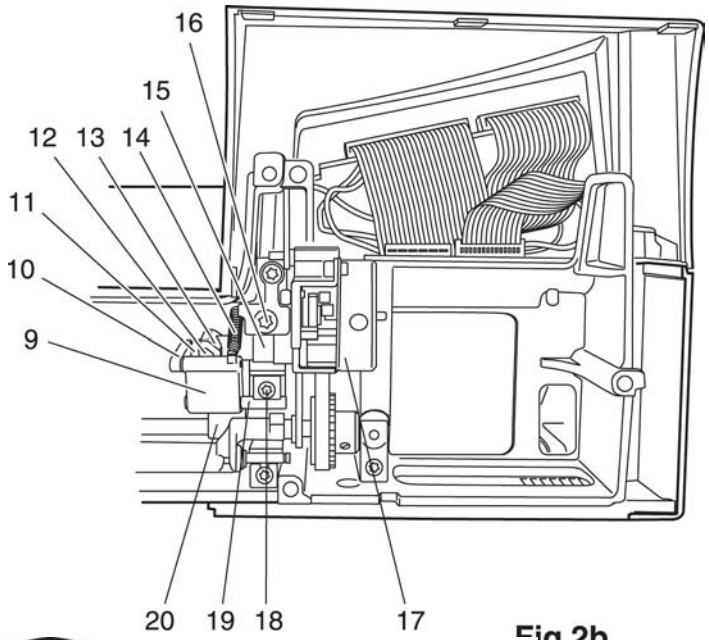

Fig 2b

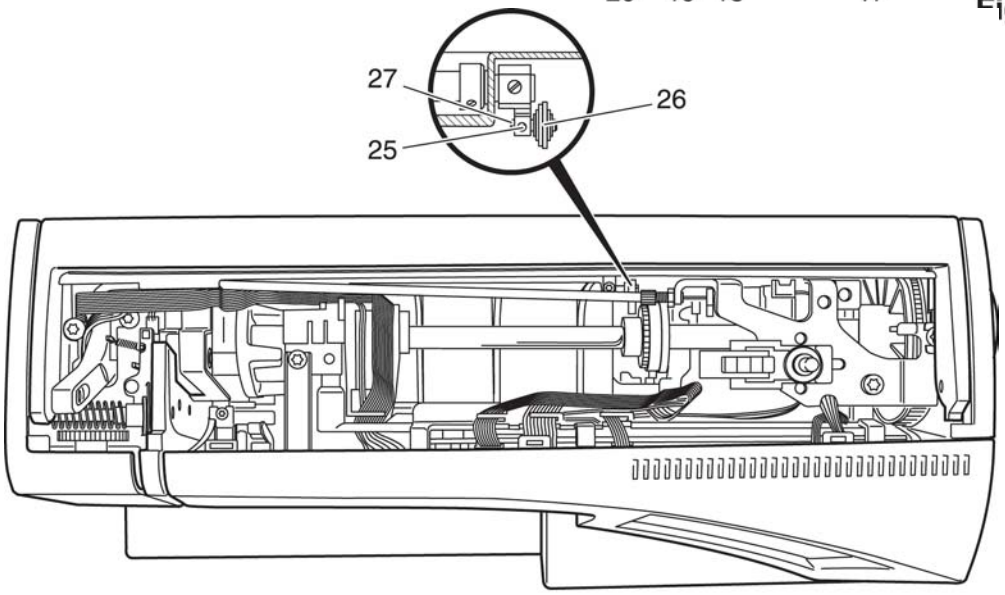

Fig. 2c

3. Timing feed motion

Operating sequence:

When the rising needle has cleared the fabric, the feed dog moves up above the needle plate.
The risen feed dog pushes the fabric to the rear. Shortly before the end of the feed motion, the take-up lever is at its highest position (t.d.c.).
At a stitch length setting of 6 mm the feed dog now pushes another 0.7 mm more to the rear (feeding stroke).
After completing the feeding movement, the feed dog moves down below the needle plate surface and the needle enters the fabric.
Underneath the needle plate the feed dog moves back to its basic position.
Whenever the stepping motor changes the sewing direction from forward to reverse sewing, the feed dog must be positioned 0.3-0.35 mm below the needle plate surface on its downwards movement.

Requirement:

When the needle bar has moved 2 mm up from its lowest position (b.d.c.), it must be possible to insert the two pins of pin gauge 63-114 690-09 simultaneously in the holes of the feeding eccentric and the bolt (fig. 3).

Check:

- Remove needle.
- Turn handwheel at least one revolution to set needle bar in its lowest position.
- Apply spacer 63-102600-18 over the needle bar and push it up against the needle bar frame.
- Place the needle-rise clamp 61-111600-35 over the needle bar and secure it lightly.
- Place the 2 mm feeler gauge 61-111600-02 over the needle bar with its cutout above the needlerise clamp.
- Loosen the needle-rise clamp and push the 2 mm feeler gauge up against the spacer.
- Tighten the knurled screw of the needle-rise clamp (fig. 3a).
- Turn the handwheel back and forth slightly
- If there is play on the feeler gauge, repeat the above procedure.
- Remove the 2 mm feeler gauge.
- Turn the handwheel in sewing direction until the needle-rise clamp rests on the spacer (fig. 3b).
- Tilt the machine over backwards.
- Hold the handwheel in this position while inserting the pin gauge in the holes of feeding eccentric 20 and stud 22 (fig. 3).

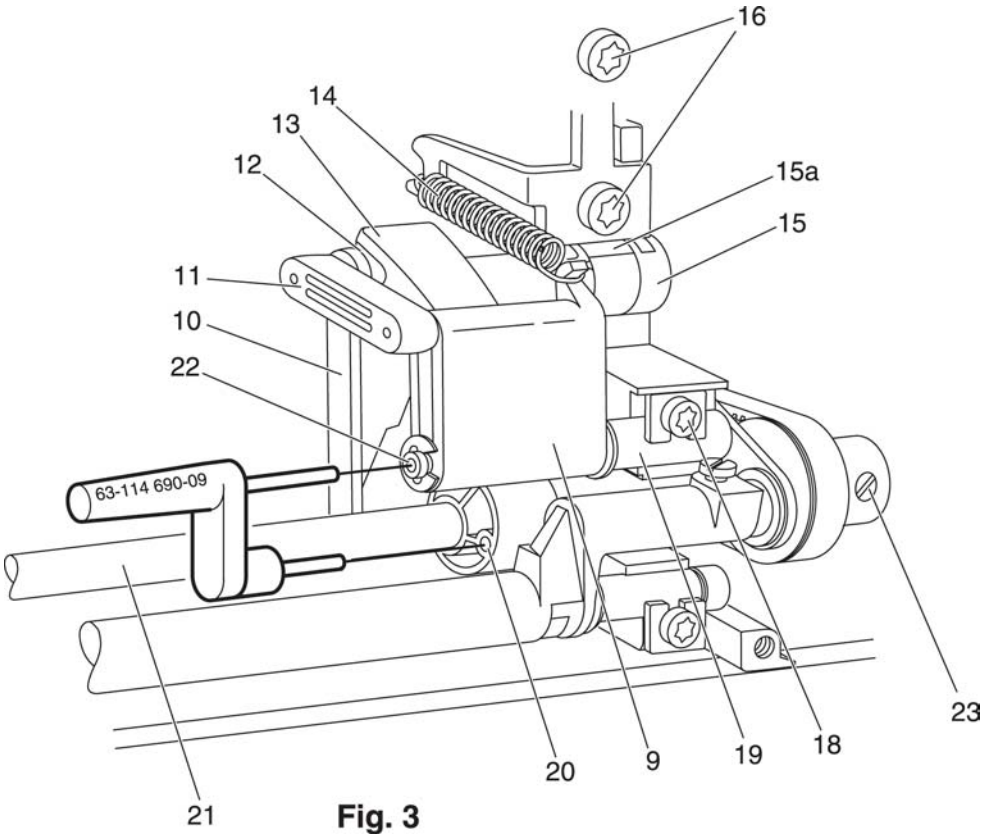

Fig. 3

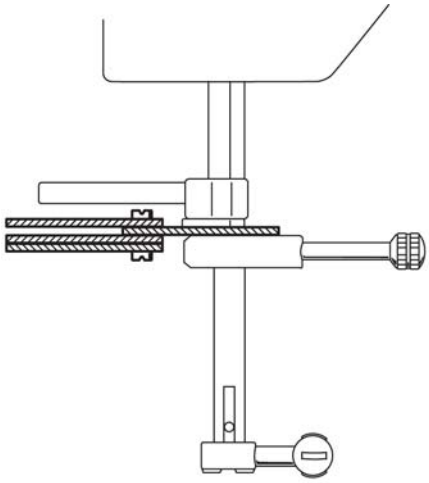

Fig. 3a

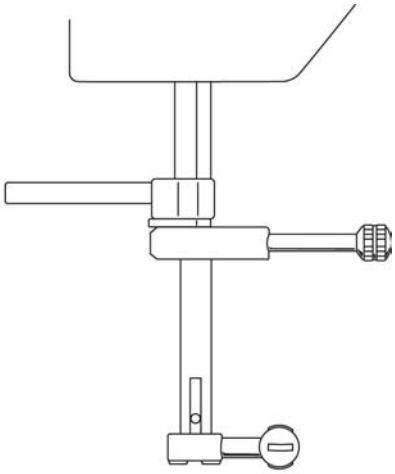

Fig. 3b

Adjustment:

If the adjustment is not correct

- Remove the needle-rise clamp.
- Loosen three screws 23 in the lower belt gear.
- Re-fit the needle-rise clamp and repeat the procedure as described in „Check“ until the needle bar has moved upwards by 2 mm and the needle-rise clamp rests on the spacer (fig. 3b).
- Turn the long drive shaft 21 in sewing direction until it is possible to insert the pin gauge in both holes (fig. 3).
- Insert the pin gauge, remove play in shaft and tighten one of screws 23.

Test:

- Remove the pin gauge.
- Tighten all three screws 23 very firmly.
- Check for play
- Check again with the needle-rise gauge and the pin gauge as described under „Check“.

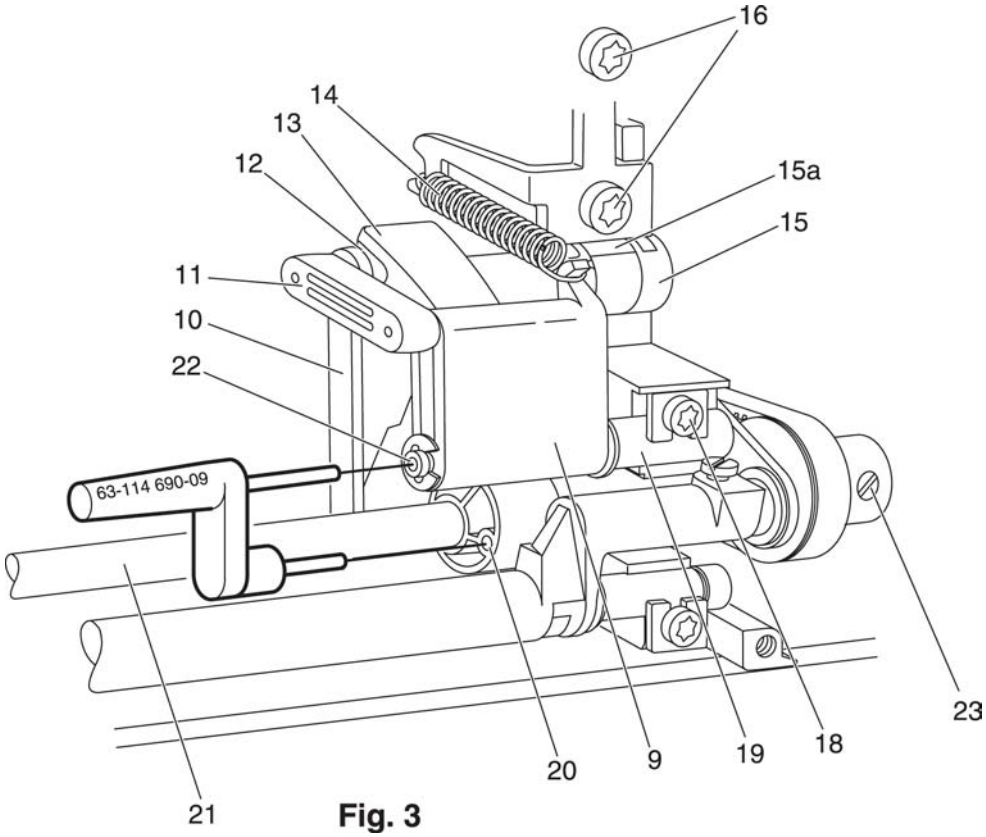

Fig. 3

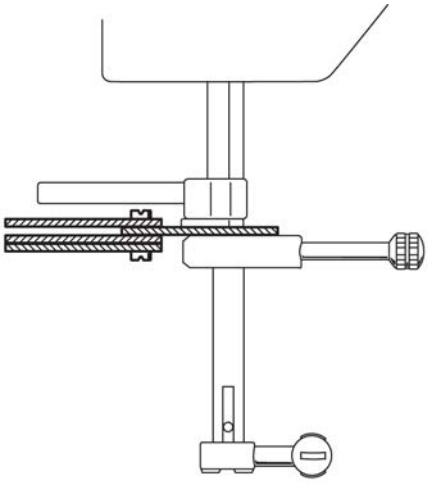

Fig. 3a

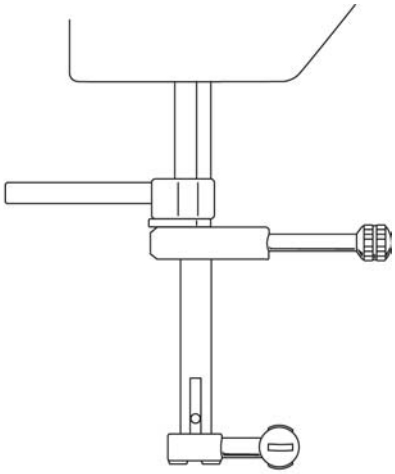

Fig. 3b

4. Adjustment of feed dog in sideways direction

Requirement:

With stitch program „1“, the distance of the feed dog to the right and left edges of the feeding slots must be equal (fig. 4).

Check:

Set stitch program „1“ and carry out a visual check of the feed dog position.

Note:

This adjustment must only be carried out when compelling reasons exist.

Adjustment:

- Remove needle and presser foot.
- Remove baseplate and free-arm cover, but leave all electrical connections in place.
- Turn on the master switch.
- Select a stitch length of 6 mm in stitch program „1“.
- Turn handwheel a complete turn.
- Loosen the three Torx screws 24 (fig. 4a) and turn the transverse-feed stepping motor until the feed dog is centered in the feeding slots (fig. 4).
- Lightly tighten the three Torx screws 24 (fig. 4a).

Test:

- Touch the multi directional-stitch icon.
- Select maximum sideways feeding.
- Turn handwheel and check the distance of the feed dog to the left and right edges of the feeding slots.
- If the adjustment is correct, tighten Torx screws 24 (fig. 4a).
- Fit bobbin thread monitor and baseplate.

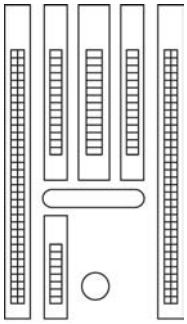

Fig. 4

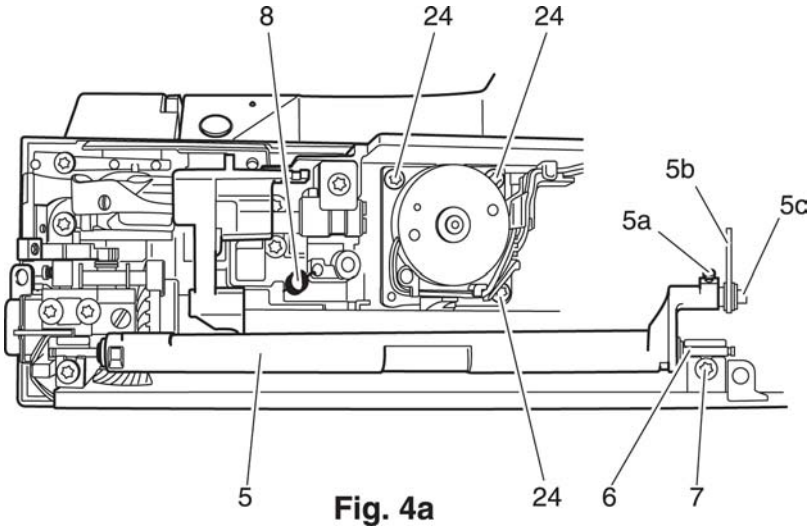

Fig. 4a

5. Adjustment of feed dog height

Requirement:

At the highest working position of the feed dog, the points of its teeth must protrude above the needle plate surface by 0.85 to 0.9 mm.
The tolerance must not remain under or exceed 0.85 to 0.9 mm. (fig. 5)

Check:

- Remove needle.
- Remove presser foot.
- Turn on master switch.
- Select stitch pattern „1“ and stitch length „6.0“.
- Place the bridge gauge 63-112120-08 over the feed dog onto the needle plate (fig. 5a).
- Turn handwheel until the feed dog is at its highest working position.
- Carry out visual check.
  The feed dog must not come in contact with the gauge.

Adjustment:

- Remove baseplate and free-arm cover, but leave all electrical connections in place.
- Turn handwheel until the feed dog is at its highest position.
- Loosen screw 28 by just 1/8 of a turn (fig. 5b).
- Turn eccentric stud 29 until the eccentric is facing the rear part of the housing (basic position).
- Place bridge gauge 63-112120-08 over feed dog onto the needle plate.
- Turn eccentric stud 29 counter-clockwise until the feed dog, at its highest position, nearly contacts the gauge.
- Tighten screw 28.

Test:

- Turn handwheel until the feed dog is at its highest position again.
- Carry out a visual check.
- Lower feed dog and check the function.

Fig. 5

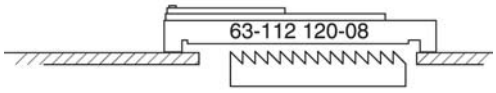

Fig. 5a

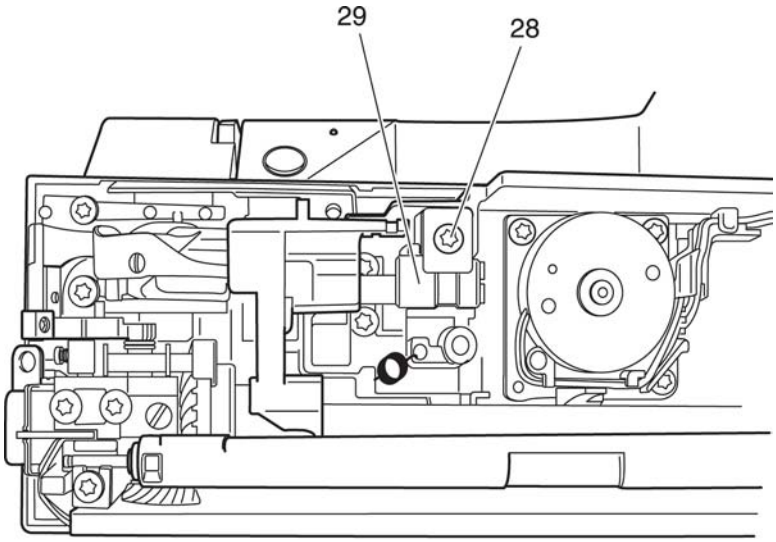

Fig. 5b

6. Adjustment of synchronizer

Note:

The following machine positions or functions are controlled by the synchronizer:

1. Change of feeding direction and change of stitch length
2. Sideways movement of needle bar
3. Take-up lever top position/needle „up“ position
4. Needle „down“ position

This adjustment must only be carried out when compelling reasons exist! It must be performed with absolute accuracy.

Requirement:

A change of sideways needle bar movement must take place when then needle in its upward movement is 7 mm above the needle plate surface (fig. 6). When the machine stops with the take-up lever in topposition, the take-up lever must have nearly reached the upper dead center.

Check:

- Insert a new needle.
- Remove the presser foot.
- Turn on the master switch.
- Select stitch pattern „3“ with stitch width „6“ and stitch length „2“.
- Turn the handwheel forward by one full turn.
- Continue turning the handwheel slowly and check the timing of the needle bar sideways movement.

Adjustment:

- Remove the folding cover and the housing insert.
- Loosen fastening screw 30 of cam 31 just slightly (Fig. 6a).
- Turn the handwheel a full rotation forwards, then keep on turning it until the needle is about 7 mm above the needle plate surface (fig. 6b).
- Keep on turning cam 31 very slowly until the zigzag stepping motor switches.
- Tighten fastening screw 30 of cam 31 (fig. 6a).
- Make sure that the lobes of cam 31 rest in the center of the circuit board guides.

Check:

- Turn the handwheel slowly and check the timing of the needle bar sideways movement.
- A change of feed direction or stitch length must take place when the feed dog has sunk 0.3+/-0.02 mm below the needle plate surface.

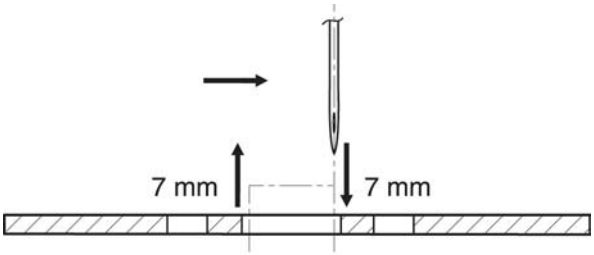

Fig. 6

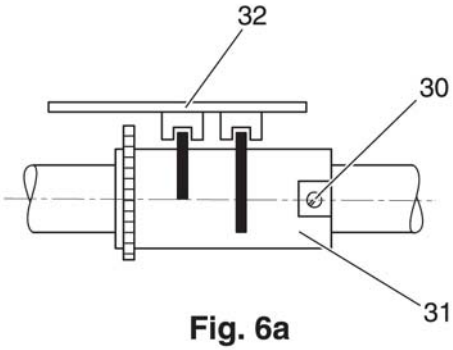

Fig. 6a

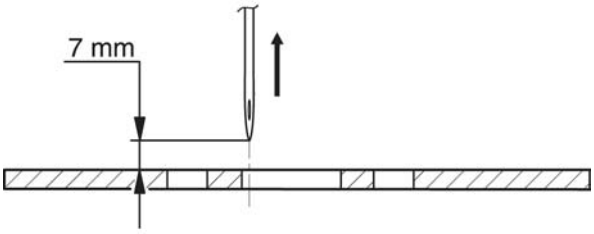

Fig. 6b

7. Adjustment of the presser foot height

Requirement:

With the presser bar lifter raised, there must be a clearance of 8 mm between the needle plate and the bottom of the presser foot # 0A

Check:

- Raise the presser bar lifter.
- Fit the presser foot # 0A.
- Lower the feed dog.
- Fully raise the presser bar lifter and hold it in this position.
- Insert presser foot gauge (63-114690-39) at the same time from behind under the zigzag foot and into the cutouts of the needle plate (fig. 7).
- Lower the presser bar lifter to its normal position again. The presser foot # 0A must rest parallel and without play on the presser foot gauge.
- However, the presser foot gauge must not lift the presser foot # 0A, and the needle thread tension release 33 must be without play (fig. 7a).

Adjustment:

- Loosen the three screws 34, 35 and 37.
- Turn the presser foot # 0A with the presser bar lifter raised until it is parallel to the sides of the presser foot gauge.
- Use a screwdriver to press presser bar guide 36 firmly downward.
- At the same time firmly tighten screw 35.

Test:

- Push the presser bar lifter further upward and release it again.
- The presser foot # 0A must rest parallel and without play on the presser foot gauge.
- Needle thread tension release 33 must be without play. The presser bar lifter must be in raised position.

Note:

- Tighten the two screws 34 and 37 later, when the top feed foot height is adjusted.

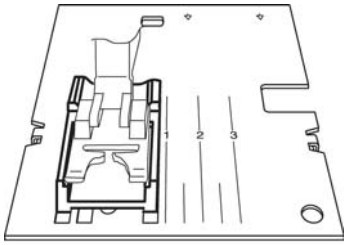

Fig. 7

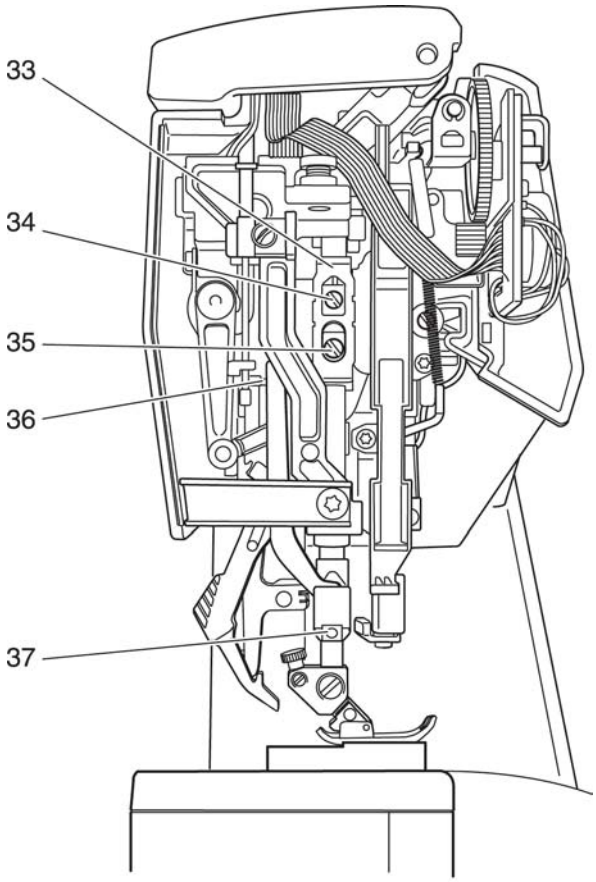

Fig. 7a

8. Adjustment of top feed foot in sewing direction

Requirement:

The front edge of the top feed foot must be between the first and second tooth point of the center tooth row of the feed dog (fig. 8).

Check:

- Raise the presser bar lifter.
- Remove the presser foot & presser foot holder.
- Select stitch length at „6“.
- Engage the top feed foot.
- Turn the handwheel until the rising feed dog is flush with the needle plate surface.
- Lower the presser bar lifter.
- Carry out a visual check.

Adjustment:

- Loosen screw 39 (fig. 8a).
- Raise the presser bar lifter until the top feed foot is just resting on top of the feed dog.
- At the same time push the top feed dog to the front or to the rear until its front edge is between the first and second tooth point of the center tooth row.
- Lower the presser bar lifter.
- Tighten screw 39 making sure that driving shaft 38 has no play.

Test:

- As described under „Check“.

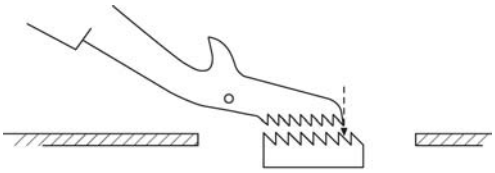

Fig. 8

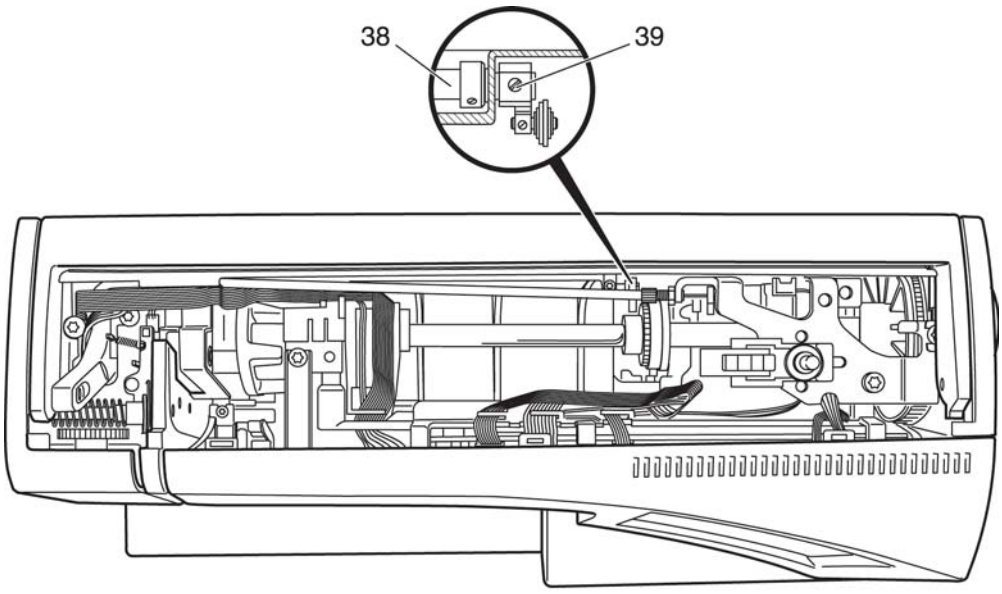

Fig. 8a

9. Adjustment of top feed foot height

Requirement:

At its highest working position the top feed foot must be 2 mm higher than the lower edge of the presser foot # 0A (fig. 9).

Note:

This adjustment must only be carried out when the height of the presser bar is set correctly!

Check:

- Raise the presser bar lifter.
- Insert the presser foot # 0A.
- Engage top feed foot 43.
- Turn the handwheel until the needle bar 44 is at its lowest position.
  Caution: The handwheel must now no longer be turned!
- Lower the feed dog.
- Fully raise the presser bar lifter and hold it in this position.
- At the same time insert the presser foot gauge 63-114690-39 from behind under the presser foot # 0A and into the cutouts of the needle plate.
- Lower the presser bar to its normal raised position.
- Press the top feed foot lightly downwards.
- Check that the top feed foot just rests lightly on the presser foot gauge and has no play.

Adjustment:

- Loosen screws 34 and 37.
- Push counter bearing 40 lightly downwards, until the top feed foot rests lightly on the sewing foot gauge.
- Tighten screw 34 in this position.

Test:

Check that the top feed foot just rests lightly on the presser foot gauge and has no play as described under „Check“.

Adjustment of the guide piece

- Fully raise the presser foot lifter and hold it in this position.
- Remove the spacer gauge.
- Lower the presser foot lifter to its normal raised position.
- Turn the handwheel until needle bar 44 is at its highest position.
- Adjust guide piece 42 with a clearance of 0.2 mm to tie bar 41 (fig. 9a).
- Tighten screw 37.

Test:

- Turn the handwheel and check the clearance of 0.2 mm.

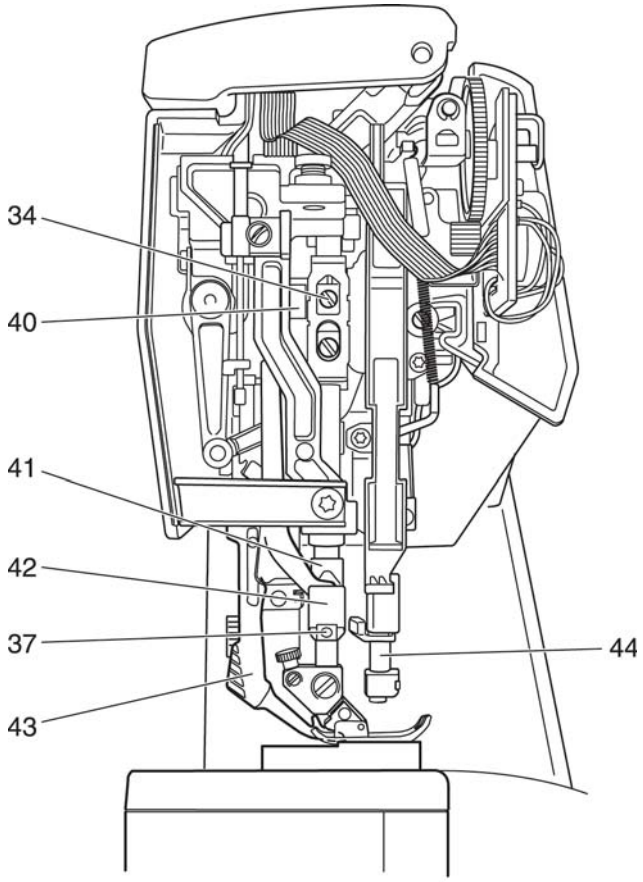

Fig. 9

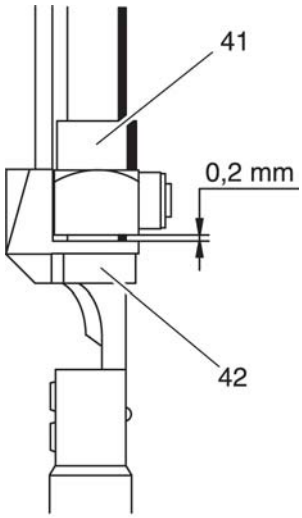

Fig. 9a

10. Adjustment of the height of the embroidery foot

Note:

This adjustment can only be carried out when the machine is completely assembled.

Requirement:

When in embroidery position, the standard presser foot must have a clearance of 5.0 mm to the needle plate surface (fig. 10).

Check:

- Turn on the machine.
- Touch the „main menu“ icon.
- Touch the „machine settings menu“ icon.
- Touch the „machine test“ icon.
- Confirm entry with „OK“.
- Touch the „test program“ icon.
- Touch the down arrow to browse to the presser foot lifter display.
- Touch the „presser foot lifter“ icon.
- Now the touch-screen shows the settings of the presser foot lifter.
- Touch the „embroidery“ icon
- The presser foot must now be 5.0 mm above the needle plate surface.

Adjustment:

- Remove the folding cover and the housing insert as described in the manual.
- Loosen counter nut 45 with a 7 mm fork wrench (fig. 10a).
- Turn threaded bolt 46 on the Bowden cable until the correct height is adjusted.
- Tighten counter nut 45.

Test:

- As described under „Check“

Note:

When in „sewing“ position the standard presser foot must rest on the needle plate surface without play when the feed dog is lowered.

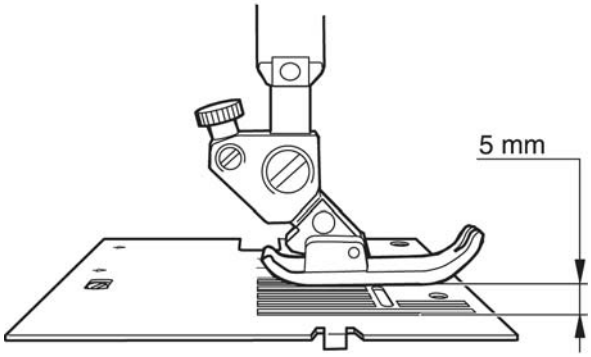

Fig. 10

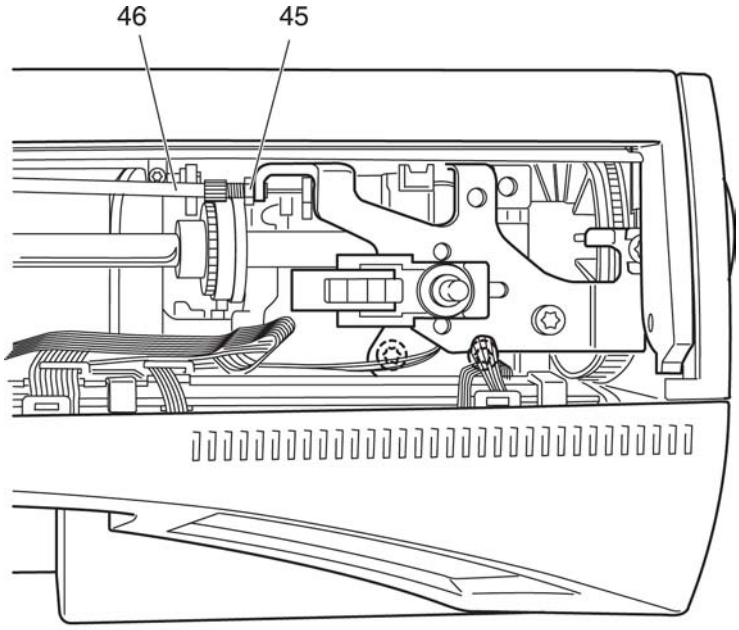

Fig. 10a

Zigzag mechanism

11. Adjustment of needle in needle plate slot

Requirement:

At the straight stitch setting, the needle must be in the center of the needle hole (fig. 11). The widest zigzag stitches must have the same distance from the left and right needle hole edges (fig. 11a).

Check:

- Remove the presser foot.
- Insert a new needle.
- Select stitch program „1“ for straight stitch.
- Turn the handwheel until the needle is in the needle plate.
- Carry out a visual check (fig. 11).
- Select program „3“ and a zigzag width of 9 mm.
- Turn the handwheel and check the left and right distance (fig. 11a).

Adjustment:

- Select stitch program „1“ for straight stitch.
- Loosen both screws 47 slightly (fig. 11b).
- Push the stepping motor 48 to the left or to the right until the needle is centered in the needle hole (fig. 11).
- Tighten the two screws 47.

Test:

- As described under „Check“.

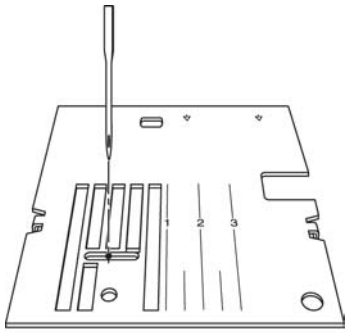

Fig. 11

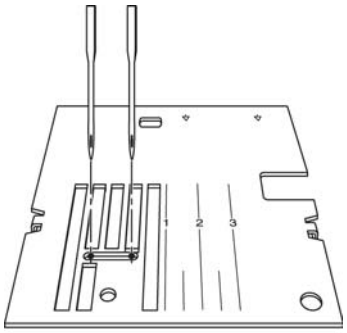

Fig. 11a

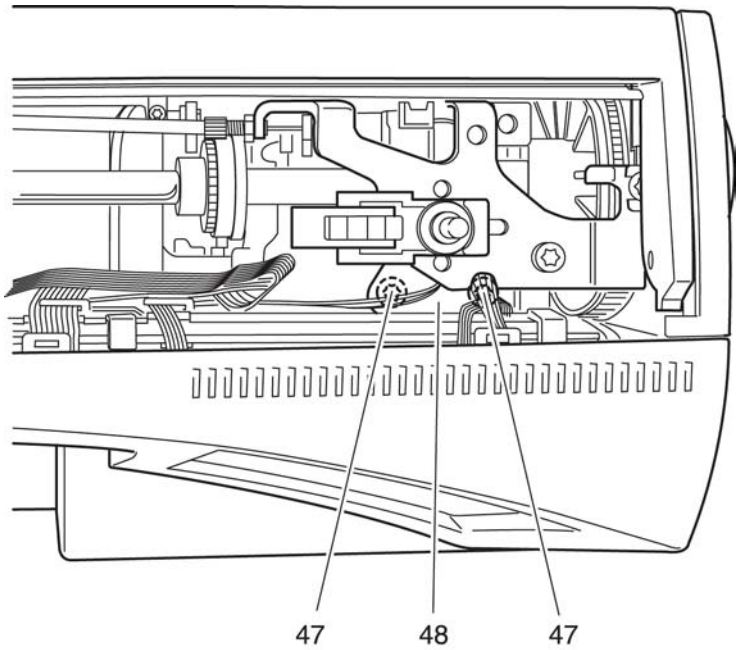

Fig. 11b

Stitch forming parts (hook)

Foreword:

The sewing hook adjustment consists basically of the three following adjustments:

Needle rise (sewing hook timing)
Needle bar height
Hook-to-needle clearance

Needle rise (sewing hook timing):

The needle rise is the movement by which the needle must rise from its lowest position until a thread loop has formed on the side of the needle on which the scarf is located. When the needle rise is terminated, the tip of the sewing hook point must be next to the needle. When the machine continues turning, the sewing hook point must enter the loop, expand it and lead it around the bobbin.

Needle bar height:

The needle bar height must be set in such a way that the sewing hook point can easily enter the thread
loop above the needle eye at straight stitch and zigzag stitch settings.

Hook-to-needle clearance:

The distance of the sewing hook point from the needle must be as small as possible, so that the sewing
hook point does not miss the thread loop.

The sequence of sewing hook adjustments is as follows:

1. Hook-to-needle clearance
2. Bevel gear setting
3. Needle rise (sewing hook timing)
4. Needle bar height

12. Position of needle in needle hole, in sewing direction

Requirement:

There must be a clearance of 0.2 mm between the back edge of the needle shank and the back edge of the needle hole in the needle plate (fig. 12).

Note:

Since system 130/705 H needles increase in size at the needle front side only, the point of a size 100 needle is positioned exactly in the middle of the needle hole (as seen in feeding direction), while the point of a size 80 needle is positioned slightly closer to the back edge of the hole.

Check:

- Insert a new system 130/705 H, size 100 needle.
- Select stitch pattern „1“ for straight stitch.
- Attach standard presser foot „0A“.
- Lower standard foot.“0".
- Turn the handwheel until the needle is at its lowest position.
- The needle must now have the same clearance to the front and rear edges of the needle hole of the foot and of the needle plate.

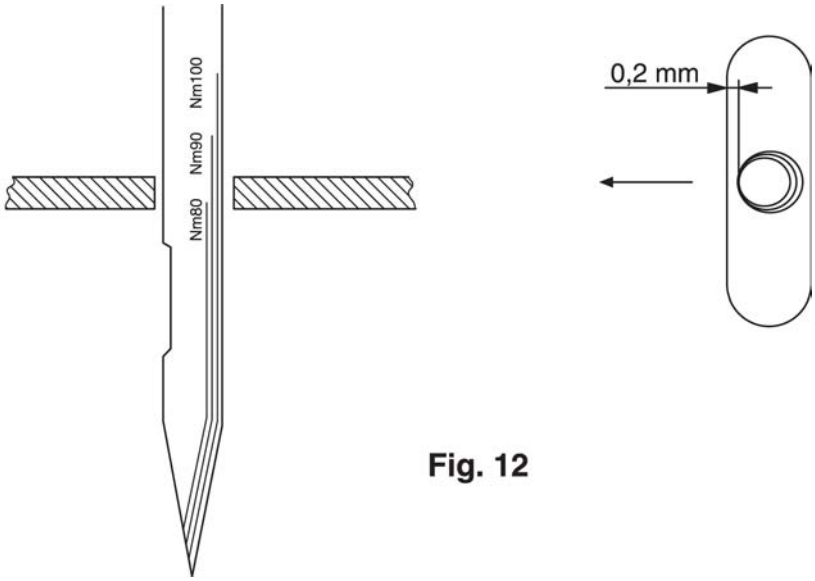

Fig. 12

Adjustment of the needle in the needle slot of the presser foot:

- Loosen screw 49 (fig. 12a).
- Push bolt 50 together with collar and needle bar frame 51 to the front or rear until the needle is in the very middle of the needle slot in the presser foot.
- Tighten screw 49.

Check:

- Turn the handwheel and raise the needle.
- Place a piece of paper under the presser foot and lower the presser foot.
- Turn the handwheel to lower the needle to its lowest position.
- The clearance of the needle from the front and rear edges of the presser foot hole must be the same.
- Loosen the Phillips screw on the face cover.
- Place the face cover carefully aside.
- Remove retaining washer 52 on the needle bar frame.
- Disengage the connecting rod and the needle bar frame.
- Move the needle bar frame back and forth to the right to the left.

Important:

The needle bar frame must move easily and without binding. If this is not the case, any binding must be removed.

- Engage the connecting rod and the needle bar frame again.
- Fit retaining washer 52.

Adjustment of the needle plate:

- Turn the handwheel and raise the needle.
- Remove the standard presser foot.
- Turn the handwheel and lower the needle to its lowest position.
- Turn setting eccentric 53 until the clearance from the front and rear edge of the needle plate hole is the same (fig. 12b).

Test:

- Carry out a visual check at straight stitch and zigzag stitch settings.

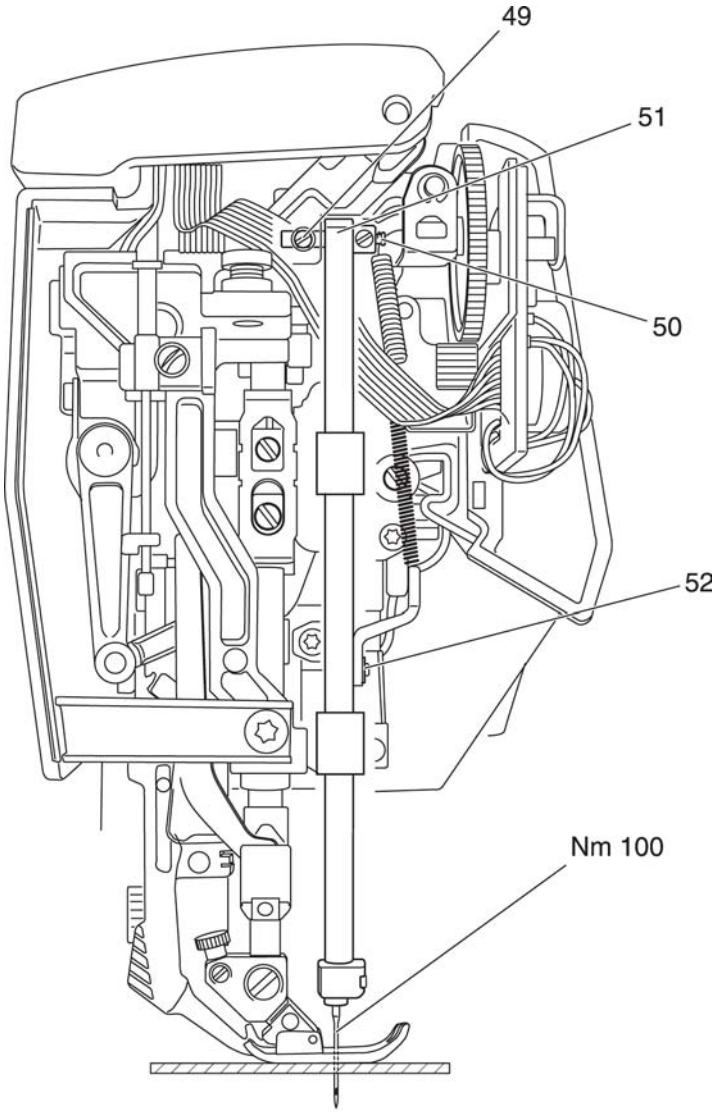

Fig. 12a

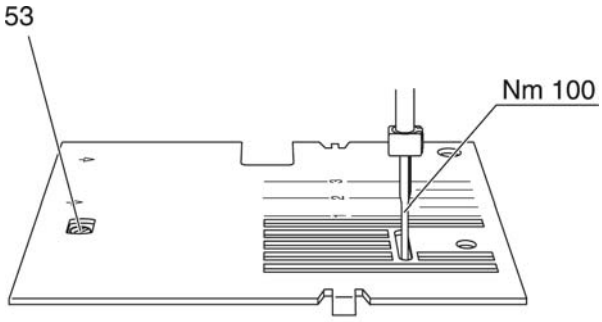

Fig. 12b

13. Adjustment of hook-to-needle clearance

Requirement:

At the straight stitch setting the clearance between the sewing hook point and the bottom of the scarf in the needle must be 0.05 mm (see fig. 13).
At the widest zigzag stitch, the sewing hook point must almost touch the needle.

Check:

- Remove the baseplate and the free-arm cover, but leave all electrical connections in place.
- Remove the needle.
- Remove the presser foot.
- Remove the bobbin case.
- Remove the bobbin case position finger.
- Remove the sewing hook gib with bobbin case base by unscrewing the three screws.
- Insert a new system 130/705 H, size 80 needle.
- Select stitch program „1“ for straight stitch.
- Turn the handwheel until the hook point is exactly opposite the center line of the needle.
- Check the clearance between hook point and needle scarf.
- Check the play of hook 54 to hook shaft bushing 55 (fig. 13a).

Adjustment:

- If the hook shaft has axial play, loosen the two screws 56.
- Press bevel gear 57 with the shaft to the front and push sewing hook 54 to the rear.
- Tighten the two screws 56.
- Loosen screw 58 in the lifting eccentric by 2 to 3 turns.
- Loosen screw 59 just a little.
- Turn handwheel and sewing hook, until the hook point is opposite the center of the needle scarf.
- Move sewing hook 54 together with hook shaft bush 55, until the clearance between the sewing hook point and the bottom of the scarf in the needle is 0.05 mm.
- Tighten screw 59 on the narrow flat of hook bush 55.

Note:

The large flat of the hook shaft bush must face right.

Test:

- Check for free movement of the hook shaft.
- Check again the clearance between the sewing hook point and the bottom of the needle scarf.

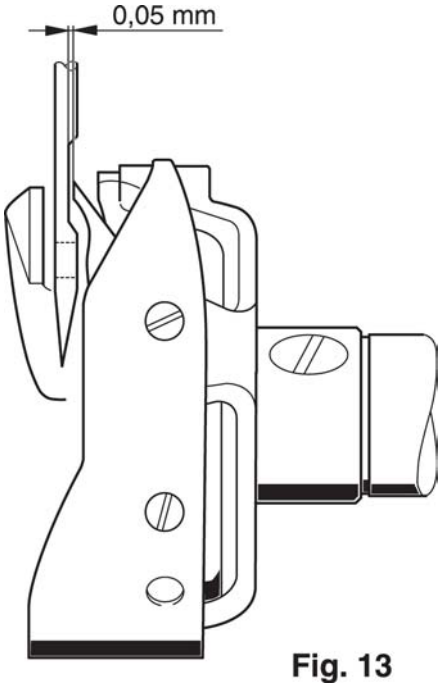

Fig. 13

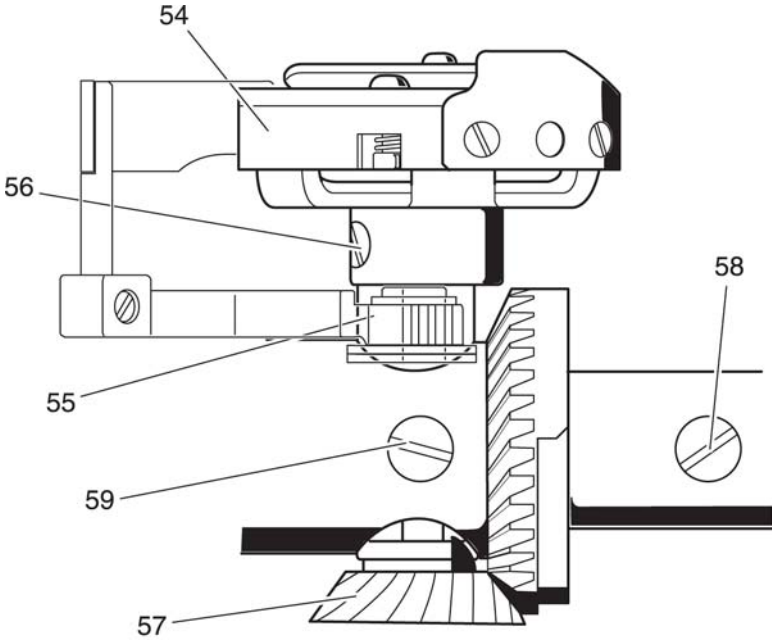

Fig. 13a

14. Adjustment of bevel gears

Requirement:

The bevel gears must move easily and without play.

Adjustment:

- Loosen screw 58 (fig. 14).
- Push bevel gear 60 with the lifting eccentric to the left until it rests on bevel gear 57 without play.
- Tighten screw 58 on the surface of the drive shaft.

Test:

- As described under „Requirement“.

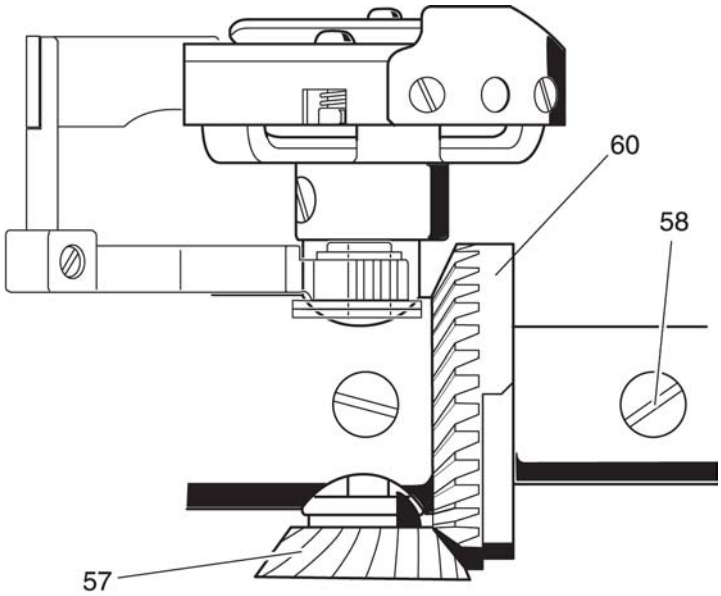

Fig. 14

Notes:

15. Hook timing

Requirement:
When the straight stitch is set and the needle bar has moved 2.3 mm upwards from its lowest position, the sewing hook point must be exactly behind the center line of the needle (fig. 15).

Check:
- Unscrew the baseplate and the free-arm cover, but leave all electrical connections in place.
- Remove presser foot „0A“ and needle plate.
- Select stitch pattern „1“ for straight stitch.
- Bring the needle bar to its lowest position by turning the handwheel (fig. 15a).
- Push the spacer 63-102600-18 onto the top of the needle bar and slide it upward against the needle bar frame.
- Push the needle-rise clamp 61-111600-35 on the needle bar and tighten it lightly.
- Push the 2.3 mm feeler gauge 61-111600-02 with its cutout on the needle bar above the needle-rise clamp.
- Loosen the needle-rise clamp and push the 2.3 mm feeler gauge upwards against the spacer.
- Tighten the knurled screw of the needle-rise clamp.
- Slightly turn the handwheel back and forth.
- If there is any play on the feeler gauge, repeat this procedure.
- Remove the 2.3 mm feeler gauge.
- Turn the handwheel in sewing direction until the needle-rise clamp rests on the spacer (fig. 15).
- This means that the needle has moved upwards by 2.3 mm to the needle rise position.
- The hook point must now be exactly behind the center line of the needle.

Adjustment:

- If the setting is not correct, remove the needle-rise clamp.
- Loosen the two screws 56 slightly until the hook 54 can be turned slowly (fig. 15b).
- Refit the needle-rise clamp and repeat the operation as described under „Check“, until the needle bar has moved 2.3 mm upwards and the needle-rise clamp rests on the spacer.
- Turn hook 54 until the hook point is exactly behind the center line of the needle.
- Press sewing hook 54 and bevel gear 57 together so that there is no play between them.
- Turn the handwheel lightly backwards, until one of the screws 56 is accessible.
- Lightly tighten screw 56.

Test:
- Slightly turn the handwheel back and forth until the needle-rise clamp rests on the spacer (fig. 15).
- The hook point must be exactly behind the center line of the needle.
- Remove the needle-rise clamp.
- Verify that the hook shaft has no axial play.
- Tighten both screws 56 very firmly.

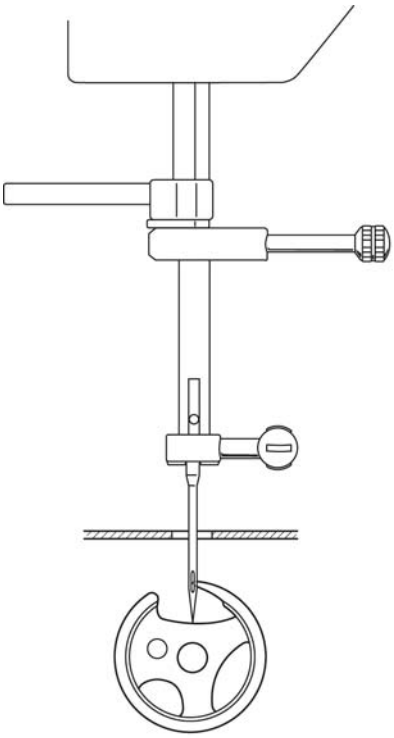

Fig. 15

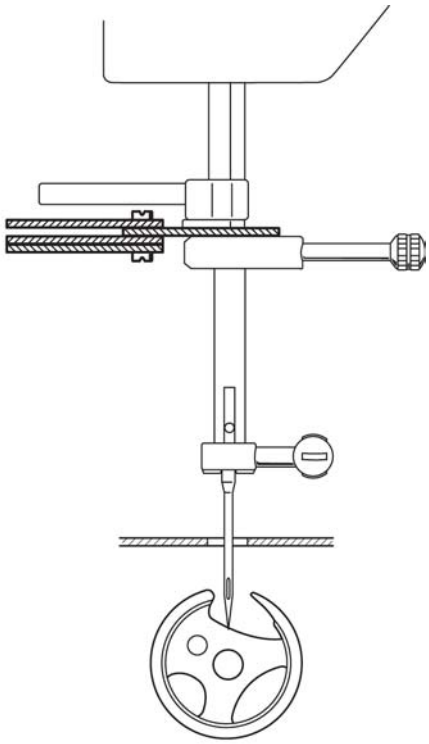

Fig. 15a

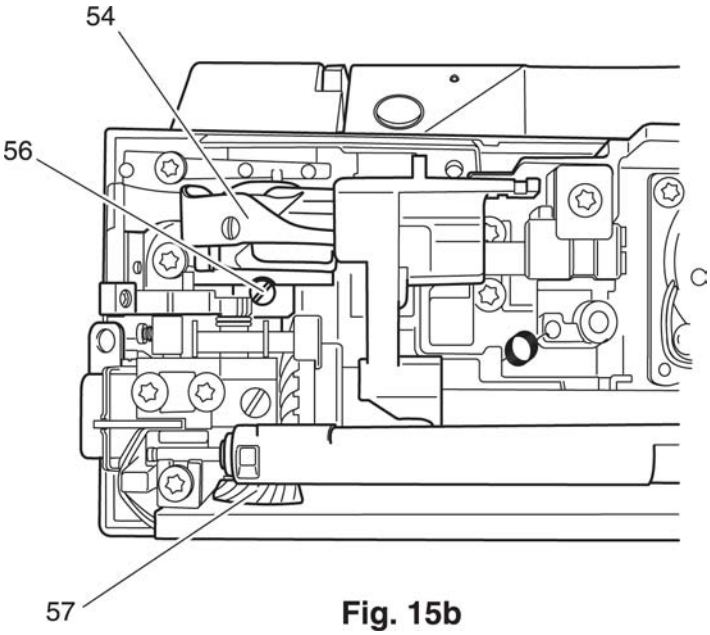

Fig. 15b

16. Adjustment of needle bar height

This machine has a transverse double-rotating hook.
At the right zigzag penetration, the sewing hook reaches the needle a little earlier and at the left penetration a little later than at the center penetration.
As a result of this, the position of sewing hook at the right zigzag penetration is slightly higher above the needle eye than at the left zigzag-penetration (fig. 16).

Requirement:

The distance between the top edge of the needle eye and the lower edge of the sewing hook point must be 0.5 mm at the widest left zigzag penetration (fig. 16a).

Check:

- Remove the presser foot „0A“ and the needle plate.
- Select adjusting program „261“ and a zigzag width of 9 mm.
- Turn the handwheel until the needle rises at the left zigzag stitch and the sewing hook point is exactly behind the needle center line.
- The clearance between the top edge of the needle eye and the hook point must be 0.5 mm.

Adjustment:

- Loosen screw 61 just a little (fig. 16b).
- Shift needle bar 62 in height, without twisting it, until the clearance of 0.5 mm is set.
- Tighten screw 61 securely.

Test:

- Check the clearance of 0.5 mm.
- The needle holder must face exactly square to the right.

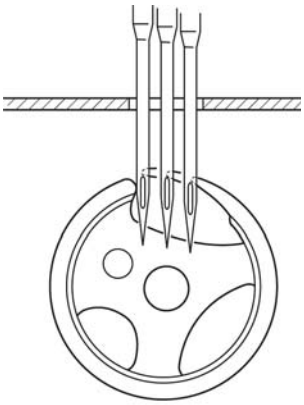

Fig. 16

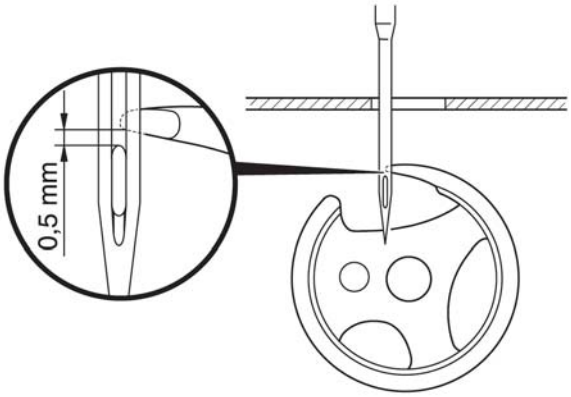

Fig. 16a

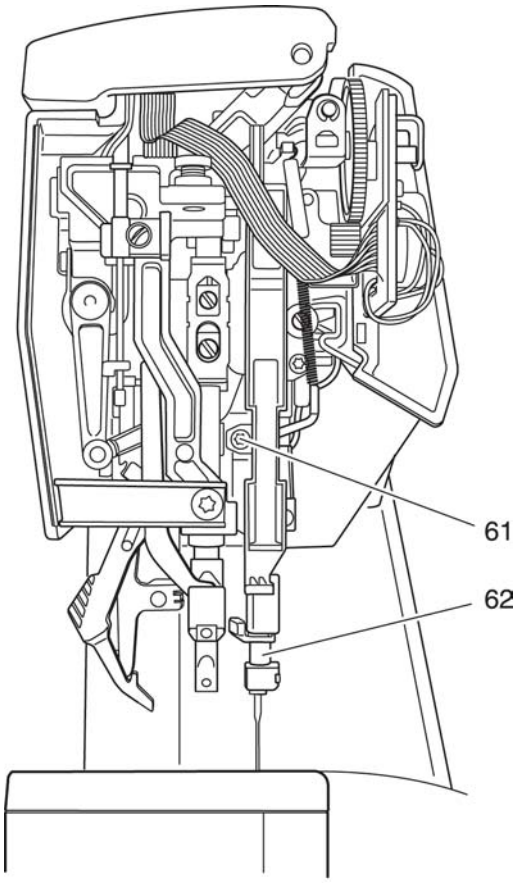

Fig. 16b

17. Adjustment of bobbin case position finger

Requirement:

The clearance between the position finger and the bottom of the groove in the bobbin case base must be 0.7 mm (fig. 17).

Check:

- It must be possible to insert the gauge 61-111621-15 with ease but without play between the position finger and the bottom of the groove in the bobbin case base.

Adjustment:

- Loosen screw 63.
- Insert the gauge.
- Press position finger bracket 64 parallel against the gauge.
- Tighten screws 63.

Test:

- As described under „Check“.

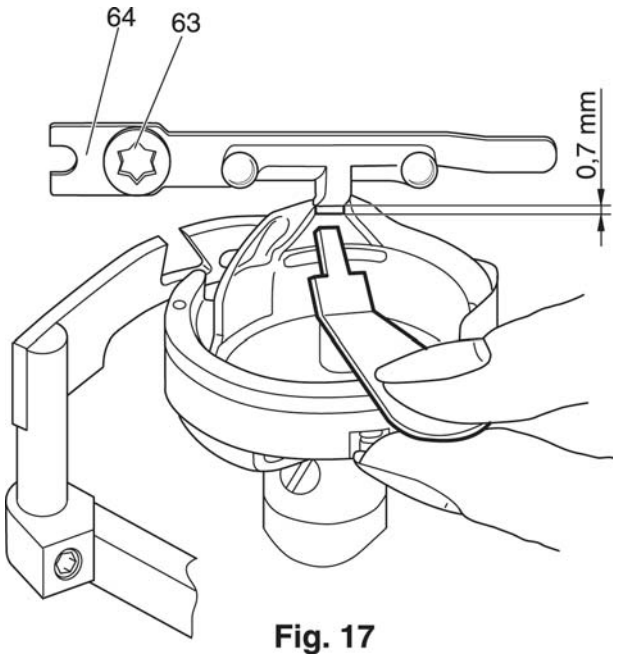

Fig. 17

18. Adjustment of the thread cutter stop

Requirement:

Stop 65 must be adjusted in such a way that it has a clearance of 0.1 mm to the highest point of cam 66 (fig. 18).
Moreover stop 65 must have a small clearance to the lowest point of cam 66 during the cutting process.

Check:

- Remove the baseplate and the thread monitor but leave all electrical connections in place.
- Turn the handwheel until the needle bar is at its lowest position.
- Keep on turning the handwheel slowly until the front end of cam 66 can be seen.
- Pull lever 67 on the lifting magnet lightly forward; the thread cutter is now automatically activated.
- Keep on turning the handwheel and carry out a visual check of the clearance.

Adjustment:

- Loosen screw 68 slightly.
- Move stop 65 to the side until the clearance is properly set.
- Tighten screw 68.

Test:

- As described under „Check“.

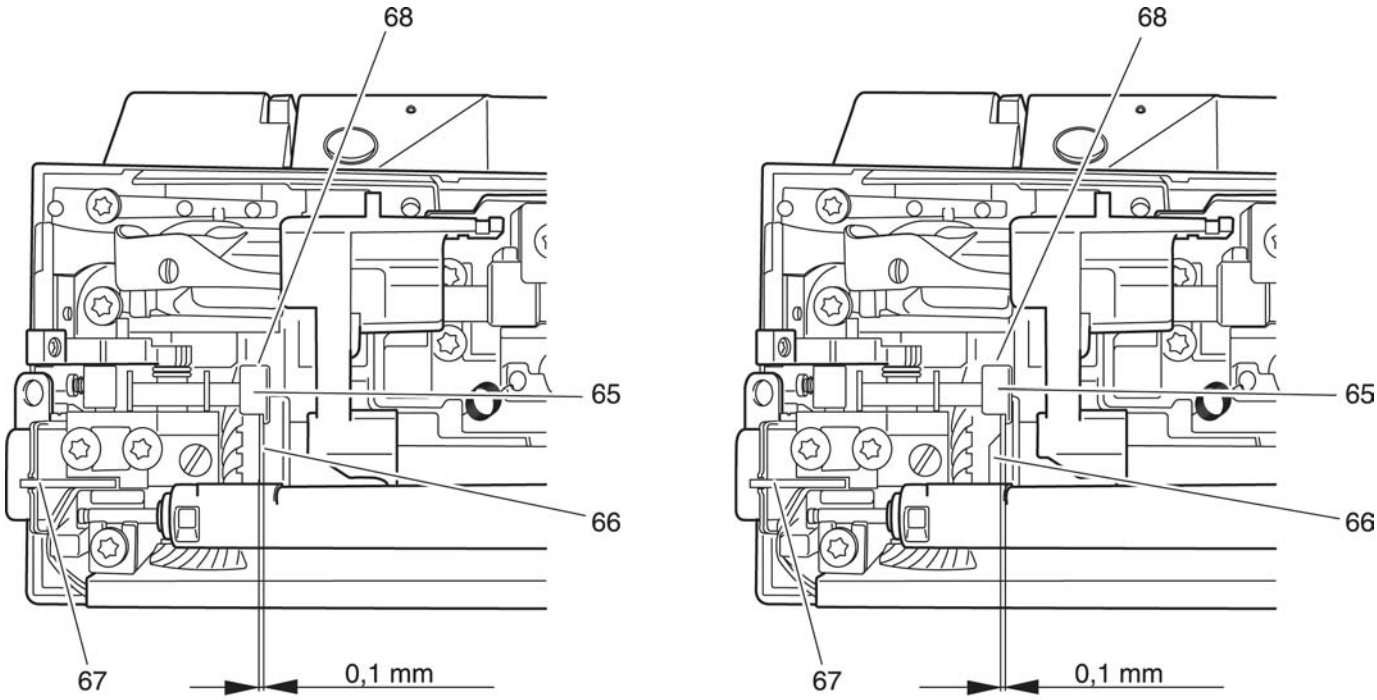

Fig. 18

Stitching off

19. Adjustment of needle threader

Requirement:

With the threader lever pushed fully down, prong 69 must pass through in the center between the top and bottom edge of the needle eye of a size 70 needle (fig. 19).
The prong must have the same distance to either side of the walls of the needle eye.

Check:

- Insert a new system 130/705 H, size 70 needle.
- Turn on the machine
- Set the machine at top needle position by briefly pressing the foot control.
- Push threader lever 70 fully down (fig. 19a).
- Carry out a visual check.

Height adjustment:

- Loosen the screw of the face cover and place the face cover aside carefully.
- Press threader lever 70 down and hold it in this position.
- Loosen Phillips screw 71 by only 1/4 of a turn.
- Push threader bracket 72 upward or downward until prong 69 has the same distance from the top and bottom edge of the needle eye (fig. 19).
- Tighten Allan screw 71 in this position (fig. 19a).

Test: 1:

- Use lever 70 to move the threader up and down. Carry out a visual check of the prong height.
- When threader lever 70 is pressed fully down, bolt 73 must rest on the upper end of the guiding slot.

Lateral adjustment:

- Use lever 70 to turn the threader prong to the front into the needle eye.
- Loosen screw 74 by just 1/8 of a turn (fig. 19b).
- Move the prong bracket laterally until the prong is precisely centered in the needle eye.
- Tighten screw 74.

Test: 2:

- Press lever 70.
  Carry out a visual check of the lateral position of the prong.

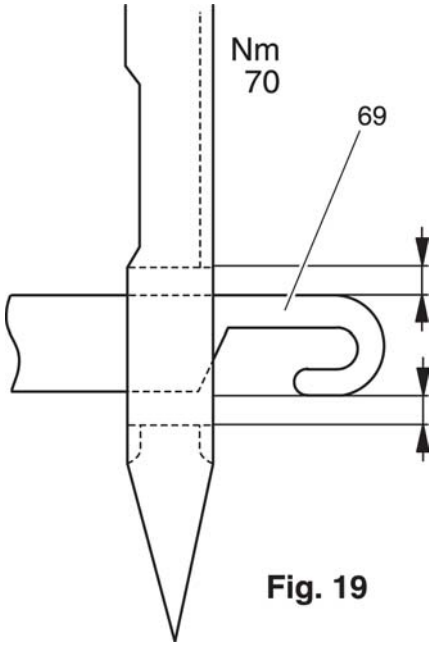

Fig. 19

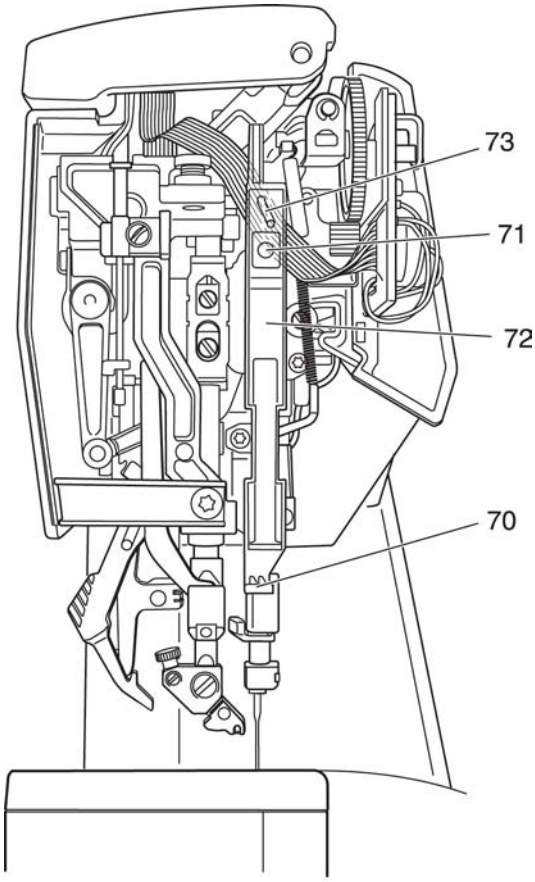

Fig. 19a

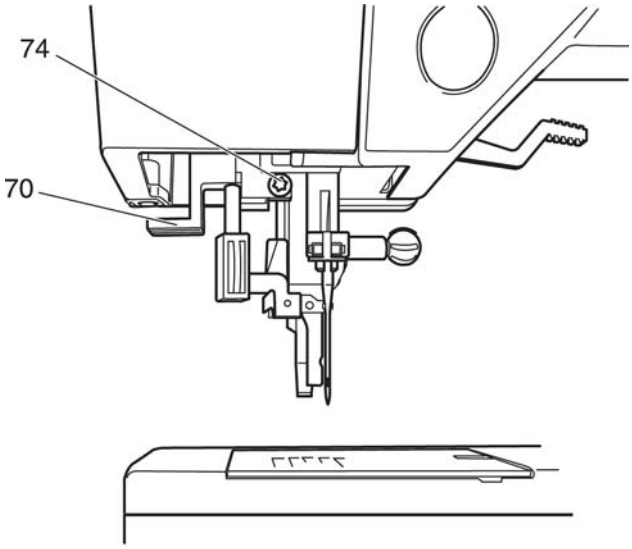

Fig. 19b

20. Adjustment of bobbin thread tension

Requirement:

The force required for pulling cotton thread 50/2 or synthetic fiber thread 100/3 off the bobbin must be approximately 25 to 30 g.

Check:

- When a threaded bobbin case hangs on its thread, it must not slide downwards by its own weight.
- Upon sharp upward movements of the hand, the thread must run off gradually (fig. 20).
- There must not be any thread waste under the tension spring.
- The tension spring must rest evenly and parallel on the bobbin case.

Adjustment:

- Loosen the knurled screw a little and turn it in again until a resistance is felt when the thread is pulled off.

Test:

- As described under „Check“.

Note:

- Once the bobbin thread tension has been set correctly, tension adjustments must be made only on the needle thread tension.

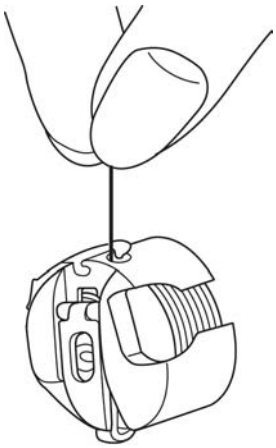

Fig. 20

Notes:

21. Adjustment of needle thread tension

Requirement:

Within the adjusting range from 3 to 5, the interlacing of the needle thread and the bottom thread (cotton thread 50/2 or synthetic fiber thread 100/35) must take place approximately in the middle of the fabric at straight and zigzag stitch setting (fig. 21 and fig. 21c).

Check:

- Turn on the Machine.
- Touch the „main menu“ icon.
- Touch the „joining“ icon.
- Select stitch pattern „3“ for zigzag stitch. The touch-screen now shows the zigzag stitch in the basic position.
- Set zigzag stitch width to 6 mm, stitch length to 2 mm and thread tension to „5“.
- Place a piece of fabric under the standard presser foot „0A“ and sew.
- Touch „esc“.
- Select stitch pattern „1“ for straight stitch.
- Set thread tension to „5“.
- Sew with straight stitch.

Adjustment:

- First turn knurled nut 75 fully to the left (fig. 21d).
- Set zigzag stitch width to 6 mm, stitch length 2 mm and thread tension to „5“.
- Sew with zigzag stitch.
- At the same time turn the knurled nut gradually in clockwise direction, until the interlacing is in the center of the fabric (fig. 21).

Test:

- Sew with straight stitch and zigzag stitch as described under „Check“.

Fig. 21

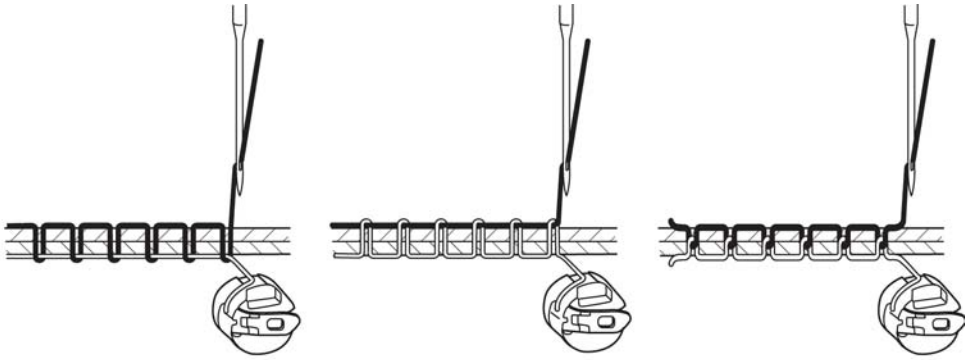

Fig. 21a Fig. 21b Fig. 21c

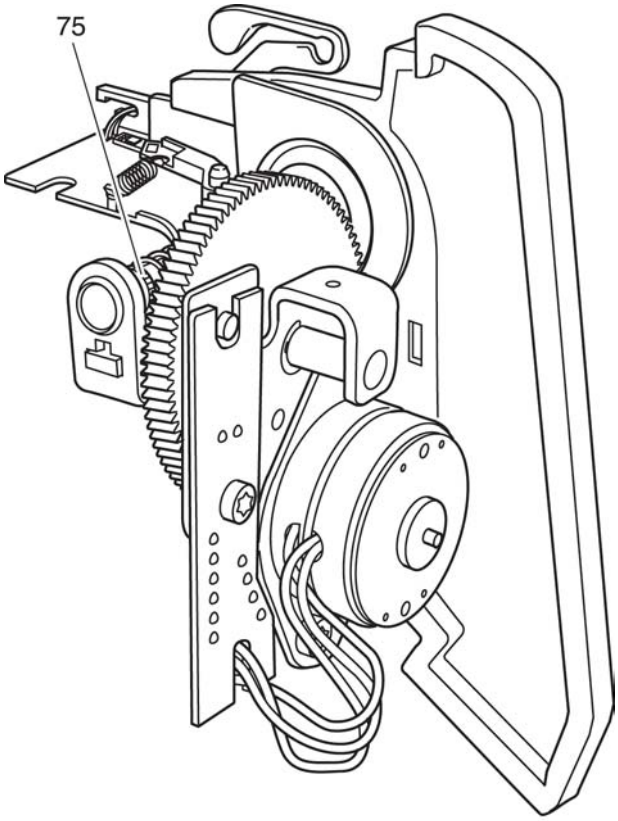

Fig. 21d

22. Adjustment of thread check spring stroke

Note:

The thread check spring prevents the descending needle from piercing the slack needle thread.
The needle thread is slackened by the descending take-up lever.

Requirement:

Thread check spring 76 must keep the needle thread taut at least until the needle point enters the fabric (fig. 22).
The thread check spring must release the needle thread as soon as the lower edge of the needle eye enters the fabric.

Check:

- Turn on the machine.
- Touch the „basic menu“ icon
- Touch the „joining“ icon
- Select stitch pattern „1“ for straight stitch.
- The touch-screen of the machine now shows the straight stitch in its basic position.
- Set the stitch length at „6.0“.
- Place a piece of fabric under the standard presser foot „0A“ and sew a few stitches.
- Turn the handwheel and determine the end of the thread check spring stroke.
- The correct slackening of the needle thread takes place when it enters the needle eye not tautly but in a loose curve.

Adjustment:

- Loosen screw 77.
- Turn thread check spring stop sleeve 78 until thread check spring 76 is in the correct position.
- Tighten screw 77.

Test:

- Sew a few stitches and check as described under „Check“.

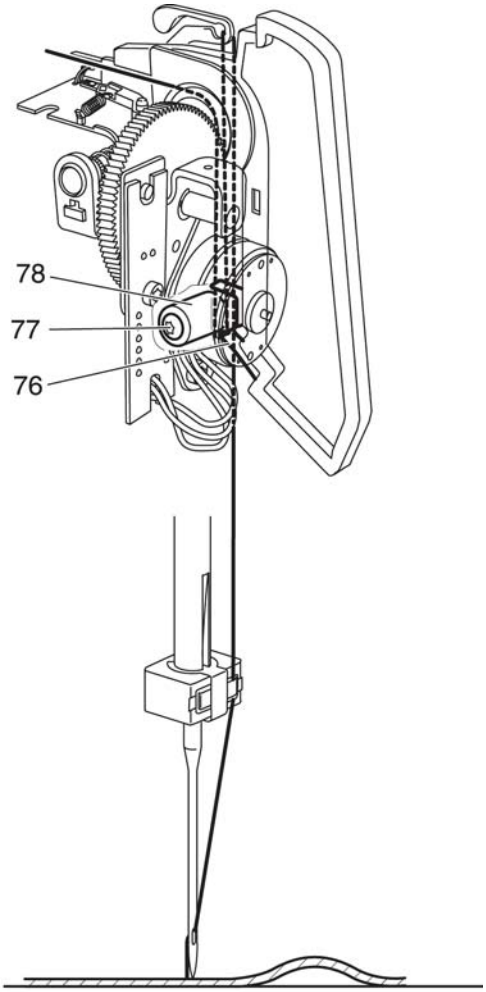

Fig. 22

23. Adjustment of equal forward and reverse stitch length

(for all forward and reverse controlled stitch patterns)

Requirement:

The darning program must be sewn as an exact rectangle (fig. 23) and not as a rhombus (fig. 23a and 23b).
The buttonhole bartack must cover the beginning of the right buttonhole seam (fig. 23c).
For this purpose the machine must be at operating temperature after 10 to 15 minutes turn-on time.

Check:

- Turn on the machine.
- Touch the „basic menu“ icon.
- Touch the „context menu“ icon.
- Touch the „machine test“ icon.
- Touch „ok“ to confirm your entry.
- Touch the „adjusting pattern“ icon.
- Touch icon „263“.
- Place a piece of fabric underneath fancy stitch foot „2A“.
- Sew the adjusting pattern „263“.

Preliminary adjustment:

- If the adjusting program „263“ was sewn according to fig. 23a, turn the adjusting eccentric with a screwdriver just 2 to 4 degrees in direction „A“ according to fig. 23d
- If the adjusting program „263“ was sewn according to fig. 23b, turn the adjusting eccentric according to fig. 23b just 2 to 4 degrees in direction „B“.

Test:

- Sew adjusting program „263“ and check.

Precise adjustment:

- Touch icon „265“.
- Place a piece of fabric underneath buttonhole foot „5A“.
- Sew adjusting pattern „265“.
- The eyelet should be nicely rounded and the wedge tack should be sewn evenly, with a tolerance of plus/minus 2 stitches(fig. 23c).
- If stitches get shorter turn adjusting eccentric slightly towards you.
  If stitches get longer turn adjusting eccentric slightly away from you.
- Touch icon „268“.
- Sew adjusting pattern „268“.
  The end stitch-point of the Bird should end up within a distance of max. 3mm from the first stitch-point.

  It is important that all three programs are in their own tolerance as well as in tolerance to each other.

Note:
If very different sewing threads or difficult fabrics are used, buttonholes, utility stitches or fancy stitches may be sewn with shifts in the pattern design.
To correct this, the customer can adjust the balance.
Always correct only the reverse stitch length.

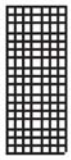
Fig. 23

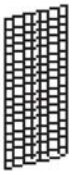
Fig. 23a

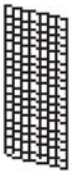
Fig.23b

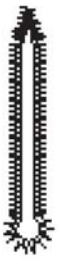
Fig. 23c

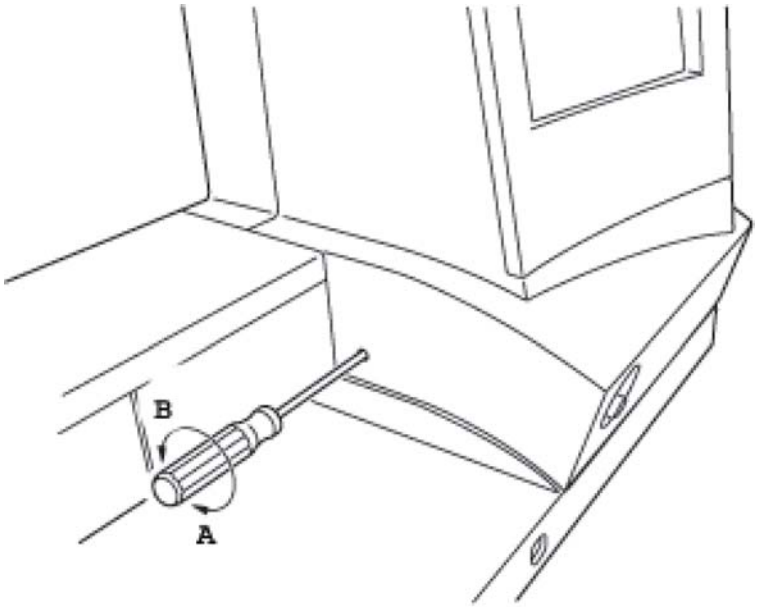

Fig. 23d

Notes:

24. Making up a sewing sample

When all sewing checks are completed and the machine sews perfectly, a sewing sample is to be made.
This sewing sample should contain the most important stitch patterns that can be sewn on a repaired machine (fig. 24).
If the customer has special requirements, these should appear on a separate sewing sample.

The following is a sewing sample made on the PFAFF 2144

Stitch program	No.	Stitch width	Stitch length or no.pattern length	Presser foot
1 Straight stitch	1	2.5		Zigzag foot „0A“
2 Zigzag stitch	3	6.0	2.0	Zigzag foot „0A“
3 Honeycomb stitch	7	6.0	2.0	Zigzag foot „0A“
4 Linen buttonhole	47	4.5	16	Buttonhole foot „5A“
5 Decorative stitch	96	6.0	0.30	Fancy stitch foot „2A“

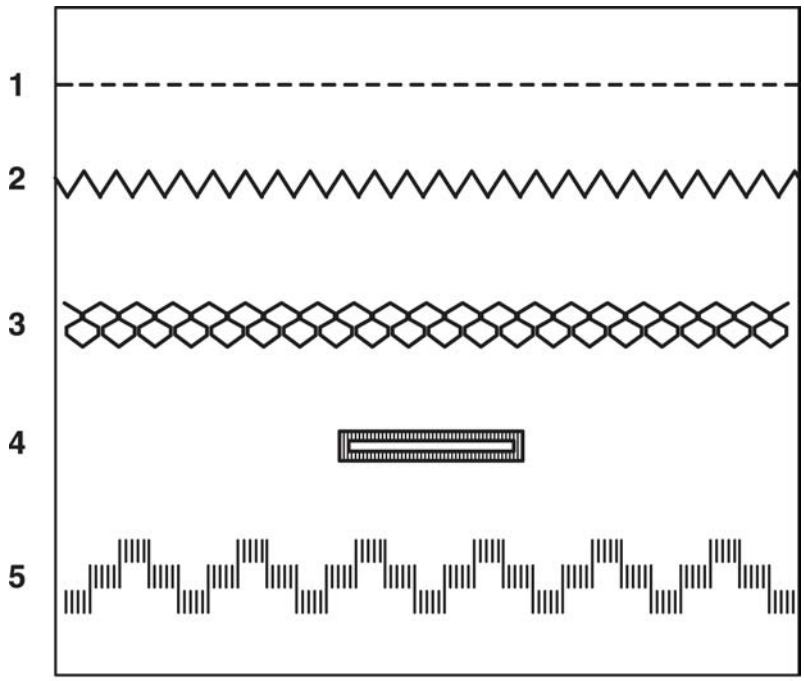

Fig. 24

25. Removing and fitting the needle thread tension

Removal:

- Remove the housing covers as described in this manual.
- Remove retaining washer 79 from bolt 80 (fig. 25).
- Remove bolt 80 and carrying handle 81.
- Remove the needle thread tension.
- Unscrew the two screws 82 and remove the stepping motor completely (fig. 25a).
- Disconnect spring 83 carefully.
- Turn the knurled nut 84 out of guide 85.
- Remove guide 85.
- Remove knurled nut 84 and the pressure spring 86.
- Pull out or knock out tension stud 87 complete with pressure piece 88 and the three tension discs 89, 90 and 91.

Note:

If the stepping motor of the needle thread tension is faulty, the needle thread tension must be completely replaced.

Refitting:

- Insert tension stud 87 with the three tension discs 89, 90 and 91.
- Fit pressure piece 88.
- Cement tension stud 87 into the mounting plate with Onmivit-Rapid.
- Push pressure-spring 86 and knurled nut 84 onto tension stud 87.
- Insert guide 85 with its right side and fully screw in knurled nut 84.
- Fit the stepping motor assembly and make sure that the guide pin is in contact with the outer surface of the curve.
- Put in the two screws 82 and turn them slightly.
- Check the soft running of the guide piece by turning the big gearwheel.
- Tighten the two screws 82.
- Connect spring 83 and install the needle thread tension.
- Fit carrying handle 81 and bolt 80 (fig. 25).
- Fit retaining washer 79.
- Adjust the needle thread tension as described in section 21.

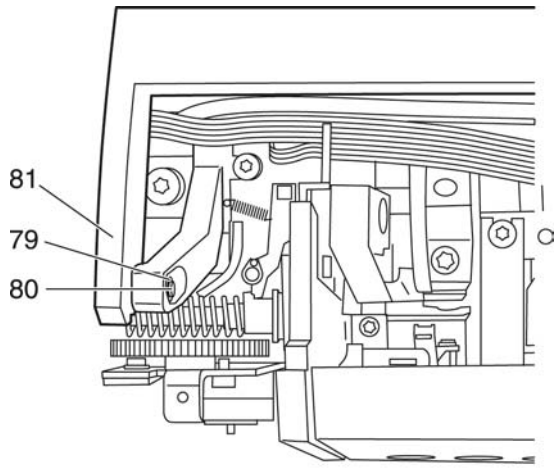

Fig. 25

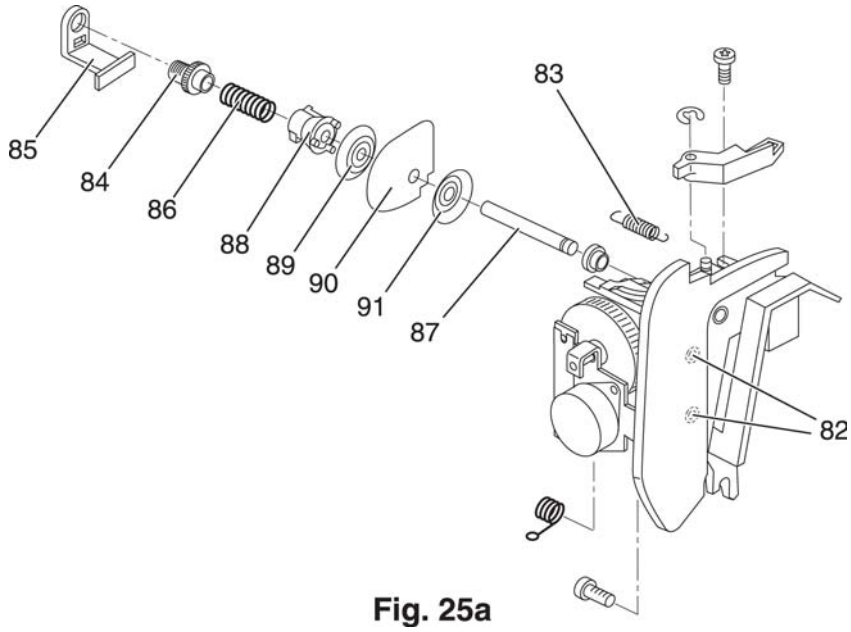

Fig. 25a

26. Removing and fitting the sewing hook

Removal:

- Remove the needle.
- Unscrew the presser foot „0A“.
- Remove the baseplate and the free-arm cover but leave all electrical connections in place.
- Remove the bobbin case.
- Remove the bobbin case position finger.
- Remove the three screws with spring (fig. 26) from behind.
- Remove the bobbin case base with sewing hook gib (fig. 26a).
- Turn the sewing hook gib to the left or to the right out of the bobbin case base (fig. 26b).
- Clean sewing hook, bobbin case base and hook gib.

Refitting:

- Turn the handwheel until the opening of the sewing hook faces to the left (fig. 26c).
- Turn the sewing hook gib to the left into the bobbin case base (fig. 26d.).
- Insert the bobbin case base complete with sewing hook gib in the sewing hook (fig. 26e).
- Secure the sewing hook gib from behind with three screws with springs (fig. 26).
- Screw on and adjust the bobbin case position finger.
- Refit the free-arm cover and the baseplate.

27. Cleaning and oiling the machine

Note:

The machine is equipped with sintered bearings and parts and is therefore maintenance-free for the user.

After repair work, the mechanic should oil the machine with BP Energol HLP 46 or HLP 80.

Sintered bearings or parts must not be cleaned with gasoline, petroleum, kerosene, thinners, trichlorethylene etc.

Dirty or clogged sintered bearings or parts may only be cleaned mechanically by brushing them off.

They are then to be oiled with BP Energol HLP 46 or HLP 80.

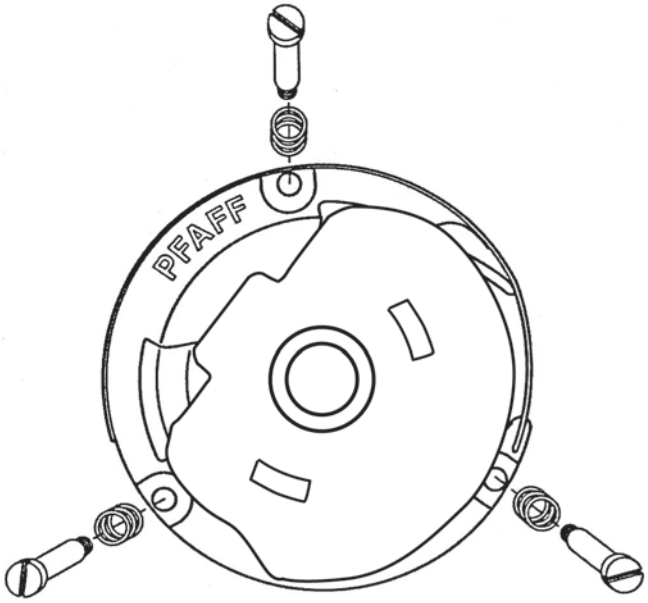

Fig. 26

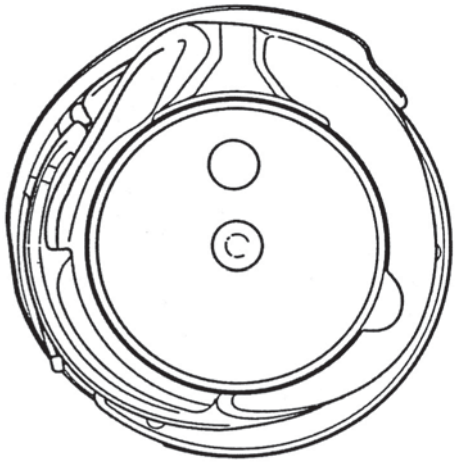

Fig. 26a

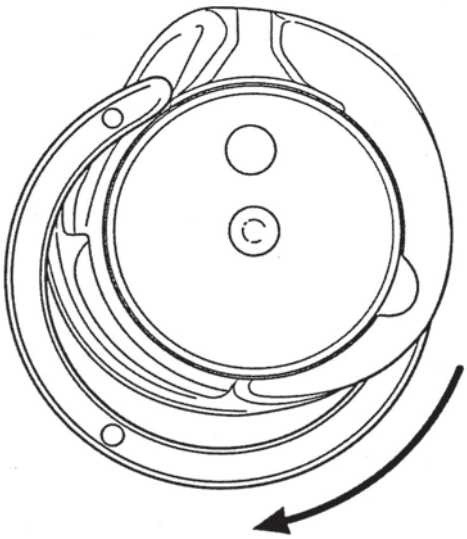

Fig. 26b

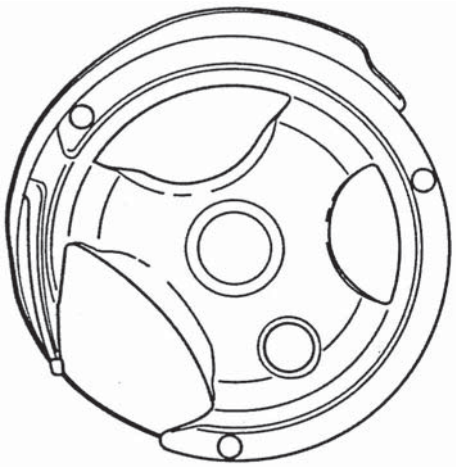

Fig. 26c

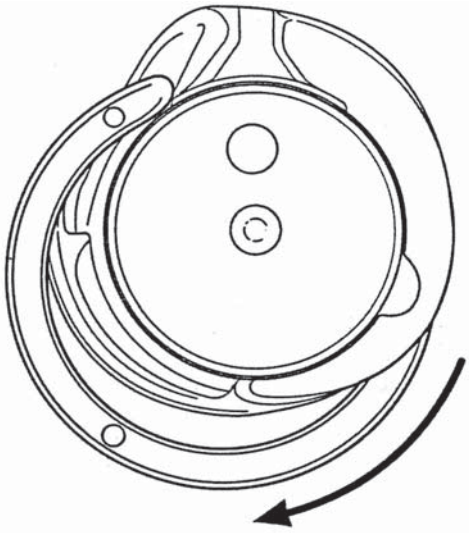

Fig. 26d

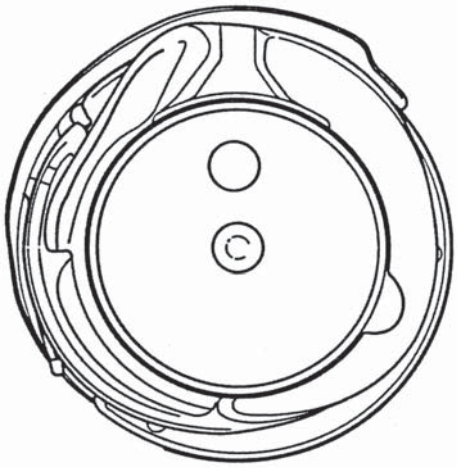

Fig. 26e

28. Changing the toothed belt

Removal:

- Remove the housing covers as described in this manual.
- Remove the two screws 92 (fig. 28).
- Loosen screw 93 of the clamping plate of the Bowden cable (fig. 28a).
- Remove the Bowden cable at the presser bar guide.
- Remove the bracket completely and carefully.
- Take the cable out of the cable guide and remove the cable guide.
- Turn the handwheel until the lobe of feeding eccentric 20 is positioned at the rear (fig. 28b).
- Loosen screw 1 of tensioning roller 2 (fig. 28c).
- Tilt the machine over backwards.
- Turn out screw 94 of clamping plate 95 on the lower right calotte bearing 96 (fig. 28b).
- Remove clamping plate 95.
- Slip off toothed belt 97 from the upper and lower belt wheel 98 and 99.
- Lift the complete hook-driving shaft 21 out of the lower right calotte bearing 96 as far as it will go.
- Pull the toothed belt 97 between calotte 100 and calotte bearing 96.
- Remove the needle thread tension as described in section 25 of this manual.
- Disconnect tension spring 101 on needle bar frame 51 (fig. 28c).
- Remove retaining washer 52 on needle bar frame 51.
- Remove circlip 102 on zigzag stepping motor 48.
- Remove the complete connecting rod 103.
- Loosen screw 104 of arm shaft crank 105.
- Remove both screws 106.
- Remove both clamping plates 107.
- Lift the arm shaft crank with the crank as far out as possible from the calotte bearings 108.
- Hold the arm shaft crank firmly.
- At the same time move arm shaft 109 to the right until both parts are disengaged.
- Remove the toothed belt of the motor.
- Remove arm shaft 109.
- Remove toothed belt 97.

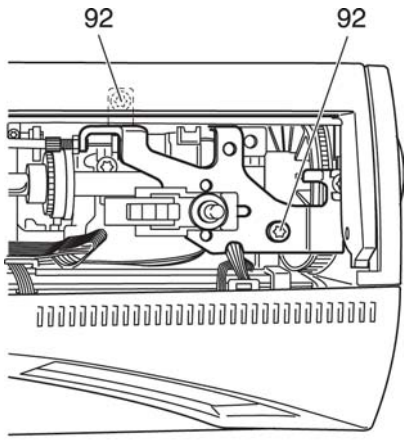

Fig. 28

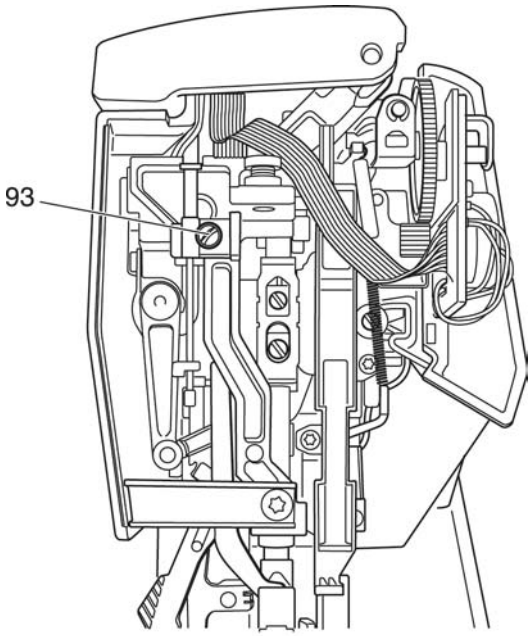

Fig. 28a

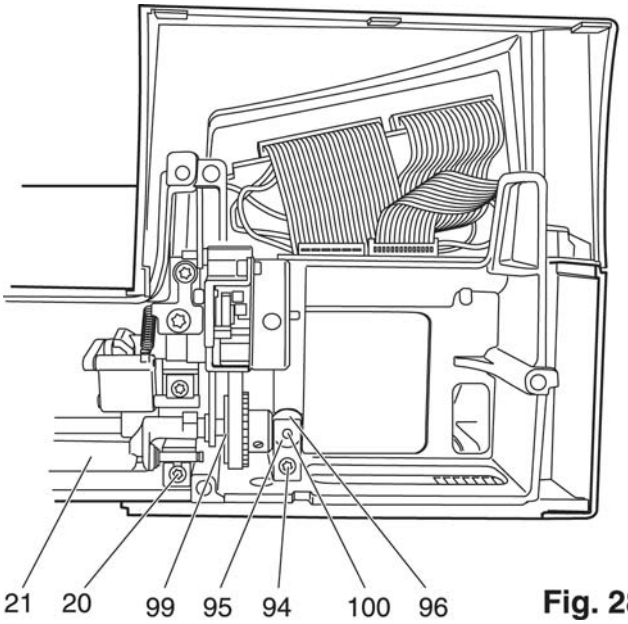

Fig. 28b

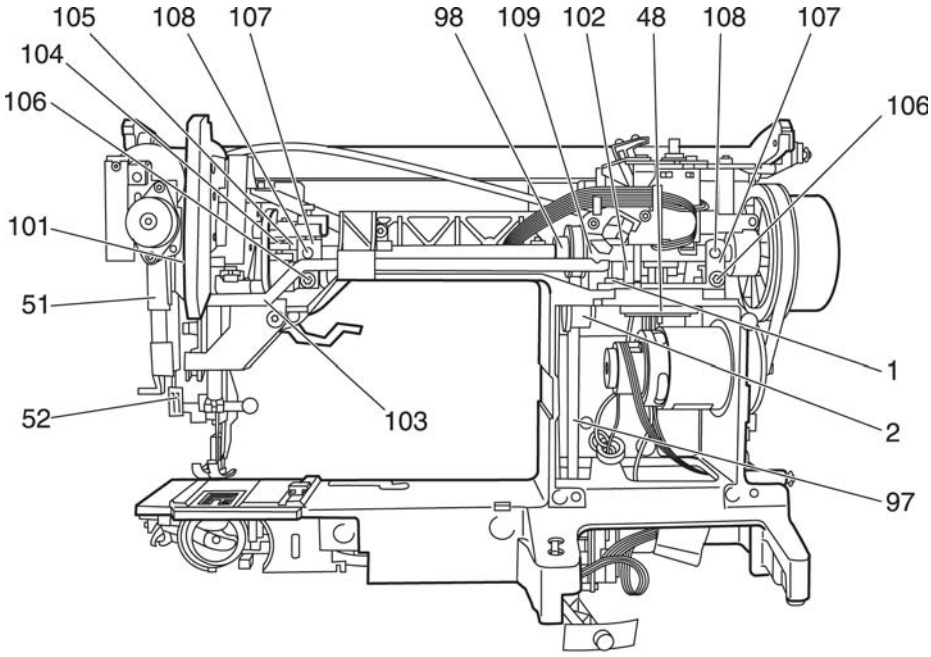

Fig. 28c

Refitting:

- Lift the hook-driving shaft 21 out of the lower right calotte bearing 94 as far as it will go (fig. 28b).
- Pull the new toothed belt 97 between calotte 100 and calotte bearing 96.
- Fit hook driving shaft 21 together with calotte 100 exactly into the lower right calotte bearing 96.
- Fit clamping plate 95 and secure with screw 94.
- Pull toothed belt 97, which is in the inner housing, upwards.
- Feed arm shaft 109 from the right into the housing (fig. 28c).
- Place the toothed belt of the motor and toothed belt 97 over arm shaft 109.
- Feed arm shaft 109 into arm shaft crank 105.
- Insert arm shaft 109 in the calotte bearings 108.
- Fit clamping plates 107 and secure them with screws 106.
- Check for free movement of arm shaft, if necessary establish it.
- Place toothed belt 97 onto the upper and lower sprockets 98 and 99.
- Adjust the toothed belt's tension as described in section 1 of this manual.
- Turn the handwheel until the screw of the control cam 31 faces downwards (fig. 28d).
- At the same time bolt 110 on the upper sprocket 98 faces upwards.
- Now position arm shaft crank 105 as shown in fig 28d.
- Press arm shaft crank 105 against the calotte of the left calotte bearing 108.
- At the same time tighten screw 104 on arm shaft crank 105.
- Check for free movement of the arm shaft, if necessary establish it.
- Attach connecting rod 103 (fig. 28c).
- Attach retaining washer 52 to needle bar frame 51.
- Connect tension spring 101.
- Mount circlip 102 at the zigzag stepping motor.
- Fit cable guide.
- Place the cables into the cable guide.
- Fit the complete bracket.
- Insert the Bowden cable in the bearing and lightly turn screw 93 (fig. 28)
- Lightly loosen screw 93 and shift the bush until the bush and the bearing are flush with each other atthe bottom.
- Tighten screw 93.
- Connect the Bowden cable on the presser bar guide.
- Install the needle thread tension as described in section 25 of this manual.
- Fit the housing shells as described in section 36 of this manual.
- Place the baseplate and the free-arm cover to the right next to the machine.

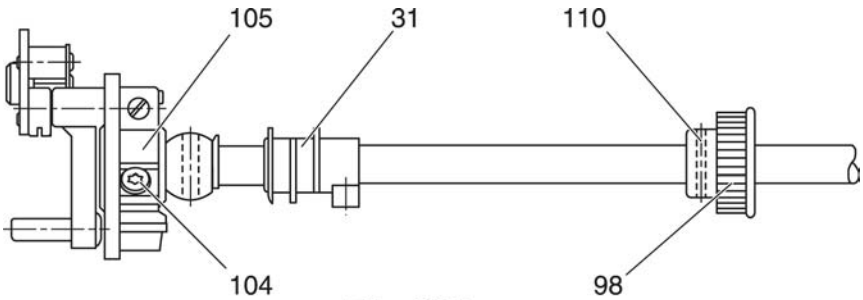

Fig. 28d

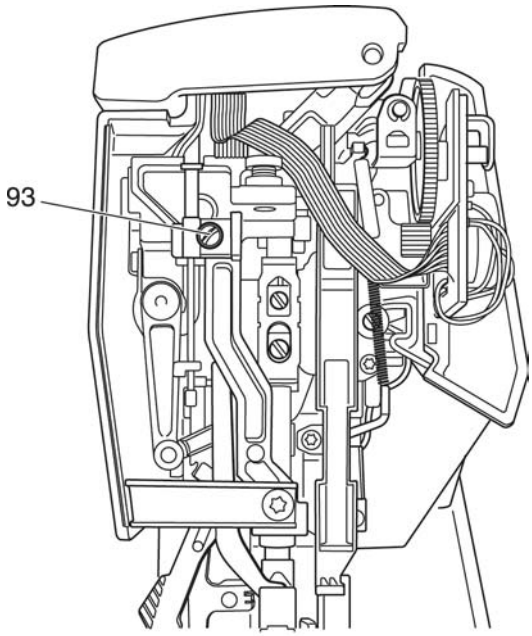

Fig. 28a

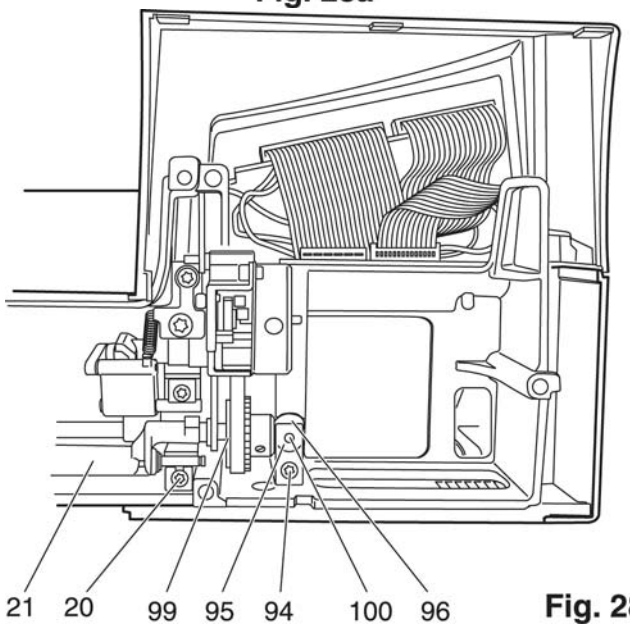

Fig. 28b

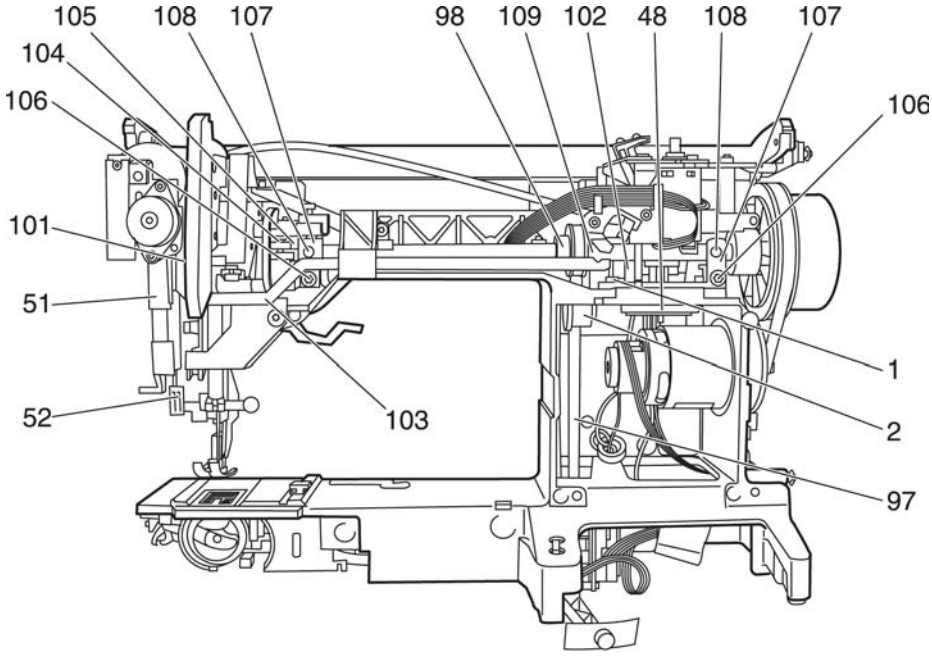

Fig. 28c

Adjustment of the machine:

- Loosen the three screws 23 in the lower toothed belt sprocket (fig.3).
- Bring the needle bar to its lowest position by turning the handwheel (fig. 3a).
- Push the spacer 63-102600-18 onto the top of the needle bar and slide it upward against the needle bar frame.
- Place the needle-rise clamp 61-111600-35 over the needle bar and secure it lightly.
- Place the 2 mm feeler gauge 61-111600-02 over the needle bar with its cutout above the needle-rise clamp.
- Loosen the needle-rise clamp and push the 2 mm feeler gauge upward against the spacer.
- Tighten the knurled screw of the needle-rise clamp.
- Turn the handwheel back and forth slightly.
- If there is any play on the feeler gauge, repeat this procedure.
- Remove the 2 mm feeler gauge.
- Turn the handwheel in sewing direction until the needle-rise clamp is resting on the spacer (fig. 3b).
- Tilt the machine over backwards.
- Hold the handwheel in this position while inserting the pin gauge in the holes of feed eccentric 20 and bolt 22 (fig. 3).
- Turn the long hook-driving shaft 21 in the normal direction, until the pin gauge can be inserted in the two holes.
- Insert the pin gauge and tighten one of screws 23.
- Remove the pin gauge.
- Tighten all three screws 23 very tightly.

Now the following adjustments have to be checked or carried out.

- Section 6: Adjustment of synchronizer
- Section 13:Adjustment of hook-to-needle clearance
- Section 15: Hook timing
- Section 16: Adjustment of needle bar height
- Fit the free-arm cover and secure it with the two screws.
- Engage the two feed regulators.
- Fold the baseplate against the machine.
- Place the cables into the cable guide.
- Secure the baseplate with the three screws on the housing.
- Section 20: Adjustment of bobbin thread tension
- Section 21: Adjustment of needle thread tension
- Section 23: Adjustment of equal forward and reverse stitch length.

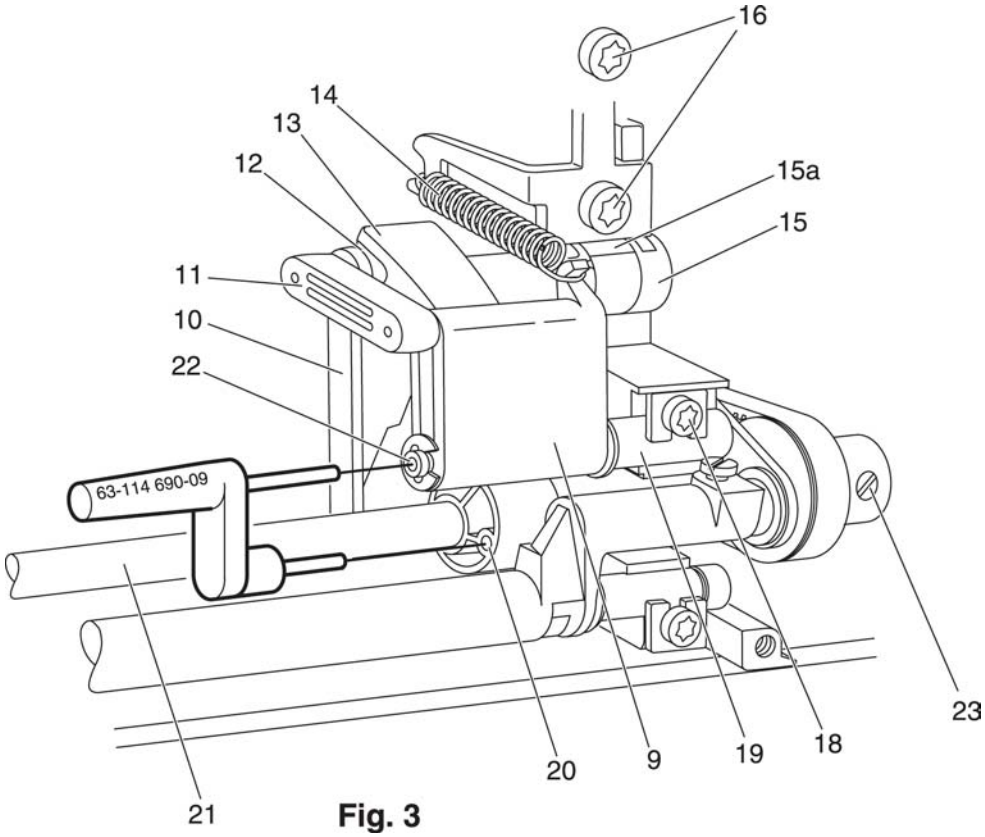

Fig. 3

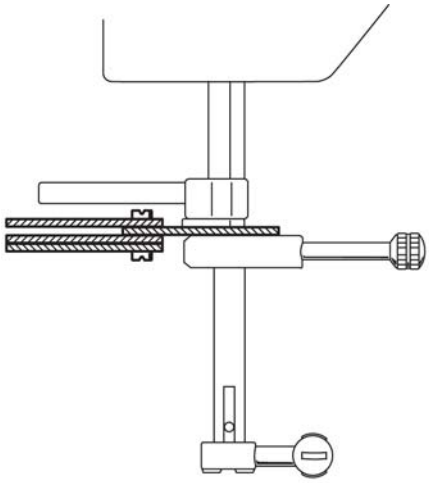

Fig. 3a

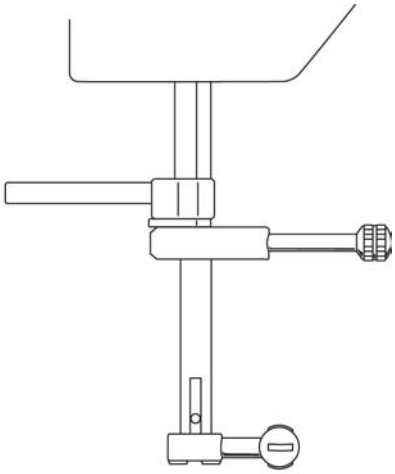

Fig. 3b

29. Changing the bevel gears

Note:

Always change bevel gears in pairs.

Removal:

- Remove the machine's mains plug.
- Remove the needle and the presser foot.
- Remove the baseplate and the free-arm cover as described in this manual.
- Remove the needle plate.
- Remove the buttonhole sensor and place it aside.
- Disconnect both tension springs 8 and 14 (fig. 29).
- Loosen screw 28.
- Remove setting eccentric 29 and feed-dog lowering mechanism 111.
- Turn out screw 63 of bobbin case position finger 64.
- Remove the bobbin case position finger.
- Turn out the screws 24.
- Remove the transverse-feed stepping motor and place it aside.
- Turn the handwheel until the lobe of feeding eccentric 20 is at the rear.
- Turn out screw 18 and remove clamping plate 112.
- Fold feed regulator 9 downwards and remove it with link 10 to the left from driving bar bolt 12.
- Loosen the three screws 23 on the lower toothed belt sprocket 99.
- Turn out screw 113 of feeding eccentric 20.
- Turn out screw 58 of lifting eccentric 60 (fig. 29a).
- Move hook-driving shaft 21 as far as possible to the right (fig. 29).
- Loosen screw 114 and remove bolt 115.
- Turn out screw 3 of clamping plate 116.
- Remove the left cylindrical bolt 4.
- Unscrew both fastening screws 117 of the hook bearing.
- Pull feeding stroke shaft 21 slightly to the front while removing the sewing hook bearing complete with lifting eccentric 20.
- Loosen both screws 56 of the sewing hook (fig. 29a).
- Remove the small hook-driving shaft with bevel gear 57 downwards.

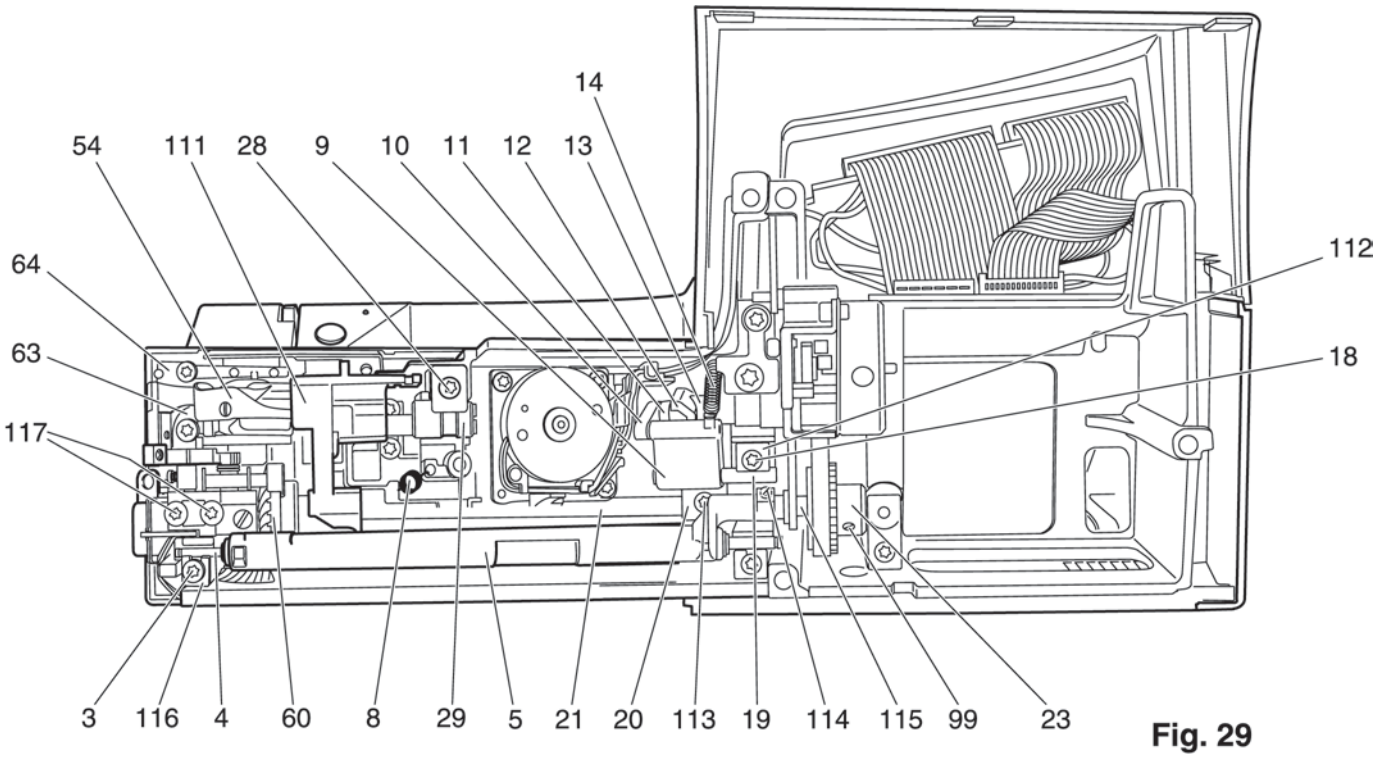

Fig. 29

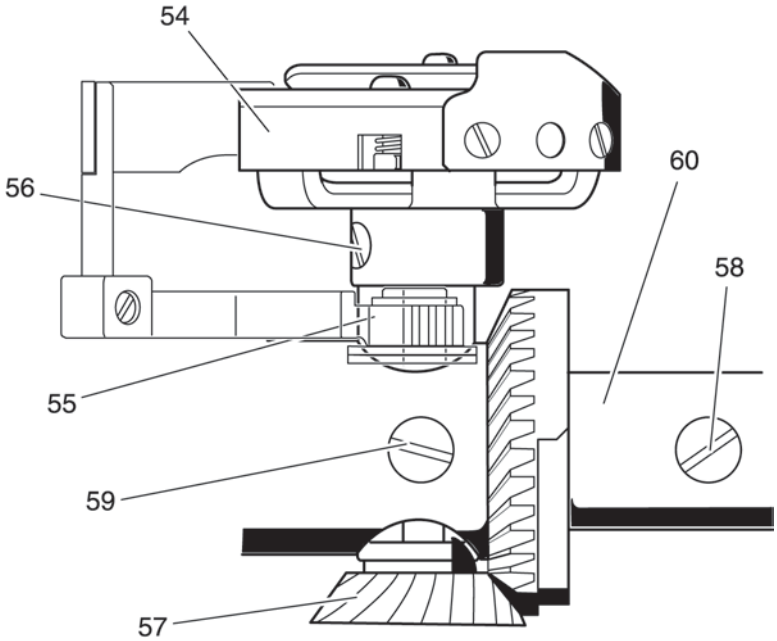

Fig. 29a

Refitting:

- Insert the new hook-driving shaft with bevel gear 57 in the sewing hook bearing (fig. 29a).
- Mount sewing hook 54 with the plastic disk on the sewing hook bearing and set it.
- Fit the sewing hook bearing together with lifting eccentric 60 into the machine.
- Mount the sewing hook bearing with both screws 117 (fig. 29)
- Make sure that the sewing hook bearing is mounted parallel to the housing.
- Push the hook-driving shaft 21 to the left and set it with toothed belt sprocket 99.
- Check that the hook-driving shaft 21 has no play and moves free of binding.
- Place the hole of lifting eccentric 60 above the surface of hook driving shaft 21.
- Slightly tighten screw 58 of lifting eccentric 60 (fig 29a).
- Push the bevel gear and lifting eccentric 60 to the left until it rests on bevel gear 57 without any play.
- Tighten screw 58.
- Screw dog-point screw 113 into feeding eccentric 20 and/or hook driving shaft 21 (fig. 29).

Note:
Dog-point screw 113 must always protrude from feeding eccentric 20 on the opposite side of screw 60 in lifting eccentric 20.

- Insert the cylindrical bolts 4 and 115 and fasten them with the clamping plates 116.
- Adjust the feed dog driving shaft 5 according to section 2.
- Fit bolt 115 with the washer situated to the left of the pull rod, without any play.
- Tighten screw 114.
- Pull the feed driving shaft 5 to the front.

Important:
The complete feed dog driving shaft 5 with top feed must slide slowly to the rear.

- Push slide block 12 with the spring onto the bolt and insert it in the slide in the correct curve radius.
- Check that the slide block can be moved easily but without play or binding in the slide way.
- Push link 10 complete with feed regulator 9 to the right onto the connecting bar pin.
- Turn feed regulator 9 to the rear and then over feeding eccentric 20 from the top.
- Insert screw 18 in clamping plate 112 and tighten it just slightly.
- Shift bolt 19 laterally until link 10 and connecting bar 11 only have a slight play and move smoothly.
- Tighten screw 18.
- Connect spring 14.
- Fit feed dog lowering mechanism 111.
- Connect spring 8.
- Install the transverse-feed stepping motor and insert the cable in the machine.
- Slightly turn the screws 24.
- Attach the free-arm cover and the baseplate.
- Place the baseplate and the free-arm cover next to the machine.

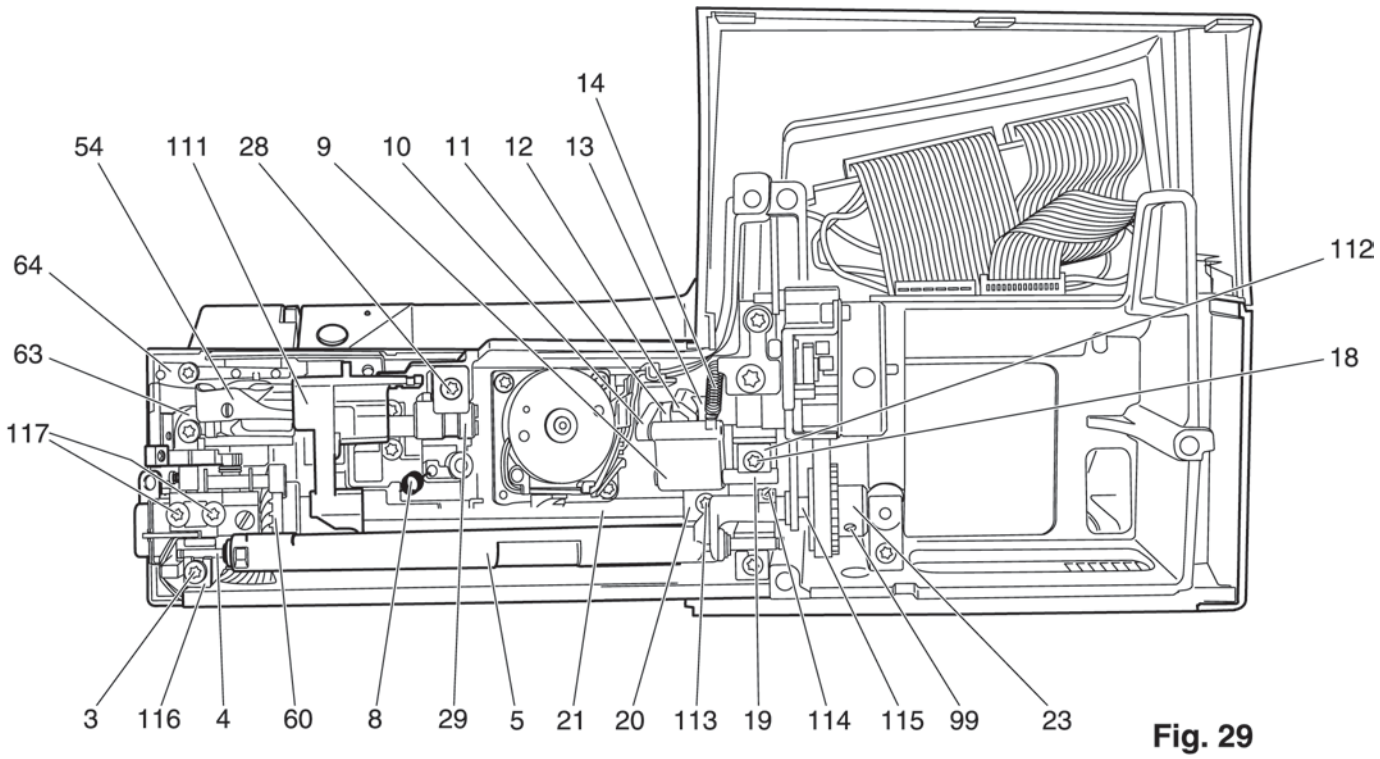

Fig. 29

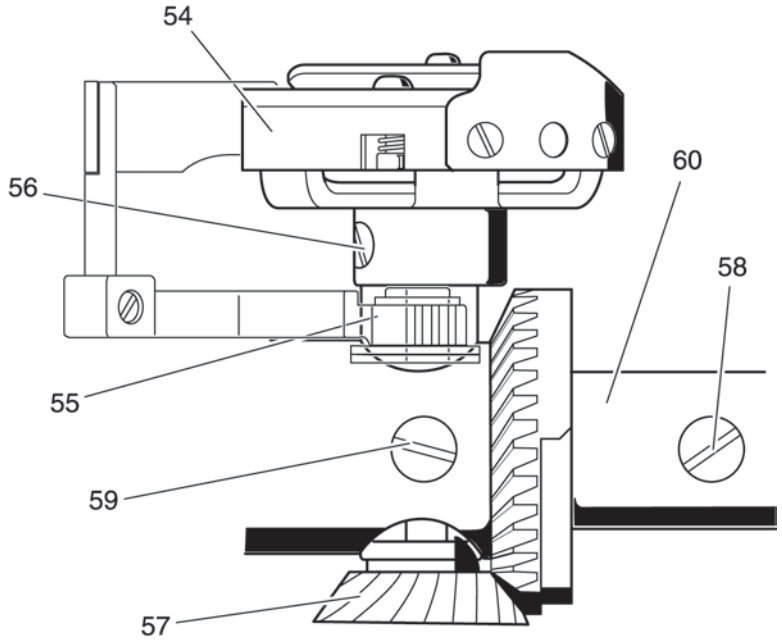

Fig. 29a

Now the following adjustments are to be carried out:

- Section 3: Timing of feed motion
- Section 4: Adjustment of feed dog in sideways direction
- Section 5: Adjustment of feed dog height
- Section 13: Adjustment of hook-to-needle clearance
- Section 14: Adjustment of bevel gears
- Section 15: Hook timing
- Section 16: Adjustment of needle bar height
- Section 17: Adjustment of bobbin case position finger
- Section 18: Adjustment of the thread cutter stop.
- Insert the buttonhole sensor.
- Attach the free-arm cover and secure it with both screws.
- Bring the feed dog lowering mechanism to its normal working position.
- Engage both feed regulators.
- Attach the cable of the thread cutter.
- Secure the baseplate with the three fastening screws to the housing.

Now the following adjustments are to be checked or carried out:

- Section 20: Adjustment of bobbin thread tension
- Section 21: Adjustment of needle thread tension
- Section 23: Adjustment of equal forward and reverse stitch length

Notes:

30. Changing the bottom circuit board

Note:

The bottom circuit board must be replaced as a complete unit.

Removal:

- Remove the machine's mains plug.
- Remove the detachable work support.
- Remove the three screws of the baseplate.
- Tilt the baseplate to the front carefully.
- Lift latch 2 only 1 to 2 mm (fig. 30).
- Disconnect the two-connection plug 3 of the thread cutter from the pin socket.
- Disconnect connection plugs 4 and 7 from the cable guides.
- Lift latch 5 only 1 to 2 mm.
- Disconnect the two-connection plug 6 of the motor cable from the pin socket.
- Disconnect plug 7 of the connection cable from the circuit board (fig. 30a).
- Loosen screw 8 of ground strap 9.
- Remove ground strap 9 with an upward movement.
- Remove plug 4a of the connection cables from the circuit board.
- Remove the complete baseplate.

Fitting:

- Set the new baseplate complete against the machine.
- Mount plug 4a on the circuit board.
- Fit ground strap 9 and secure it with screw 8.
- Fit the three plugs 3, 6 and 7 onto the circuit board.
- Place the cables into the cable guides.
- Fold the baseplate against the machine and secure it with the three screws.
- After a running-in time of 10-15 min. check the machine as described in section 23 of this manual.

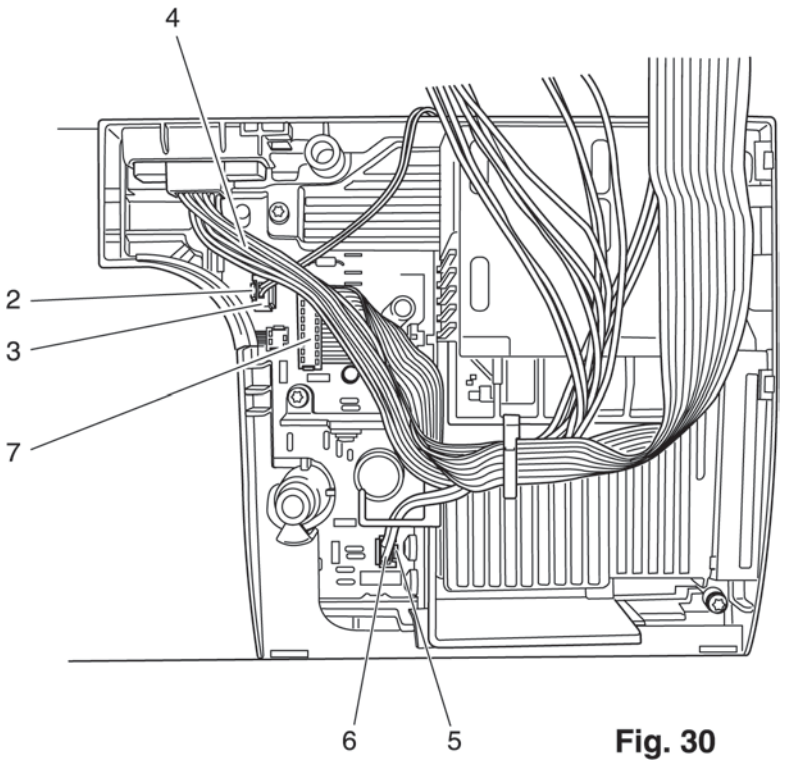

Fig. 30

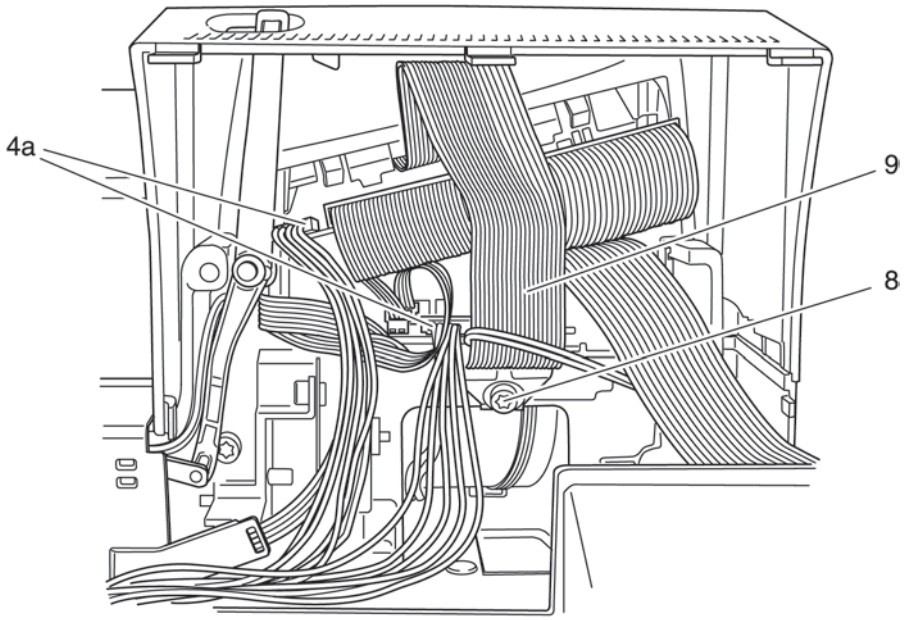

Fig. 30a

31. Removing the front housing shell

Removal:

- Remove the machine's mains plug.
- Remove the needle and the presser foot holder complete.
- Remove the detachable work support.
- Remove the folding cover.
- Remove both Torx screws of the housing insert.
- Remove the housing insert.
- Remove the three screws of the baseplate.
- Tilt the baseplate carefully to the front.
- Lift latch 2 only 1-2 mm (fig. 31)
- Disconnect the two-connection plug 3 of the thread cutter from the pin socket.
- Disconnect plugs 4 and 7 from the cable guides.
- Lift latch 5 only 1 to 2 mm.
- Disconnect the two-connection plug 6 of the motor cable from the pin socket.
- Disconnect plug 7 of the connection cable from the circuit board.
- Loosen screw 8 of ground strap 9 (fig. 31a).
- Remove ground strap 9 with an upward movement.
- Disconnect the plugs 4a of the connection cables from the circuit board.
- Remove the complete baseplate.
- Disconnect plug 10 of the flat cable of the free-arm cover from the circuit board.
- Disconnect plugs 11 and 12 of the connection cables.

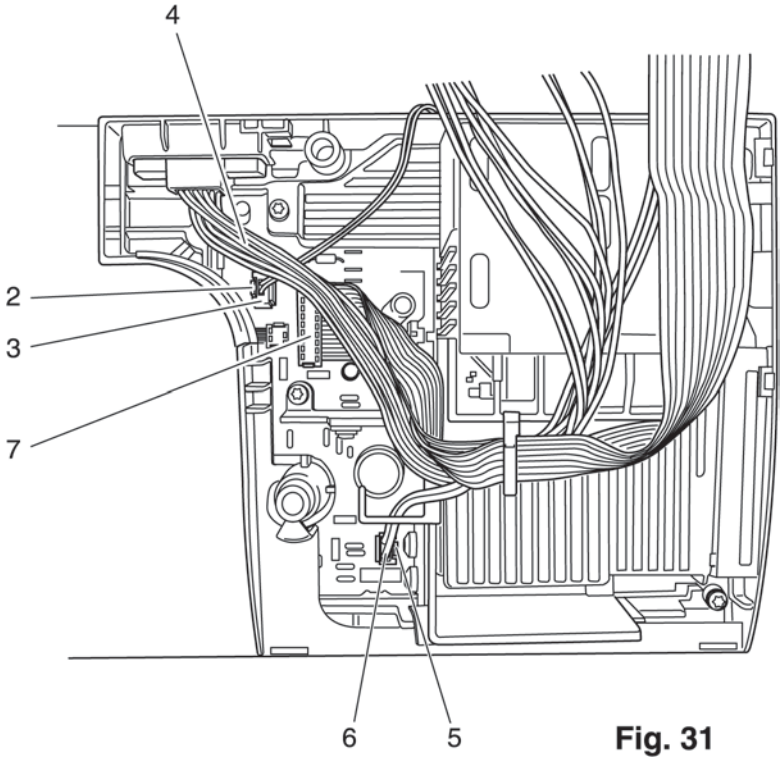

Fig. 31

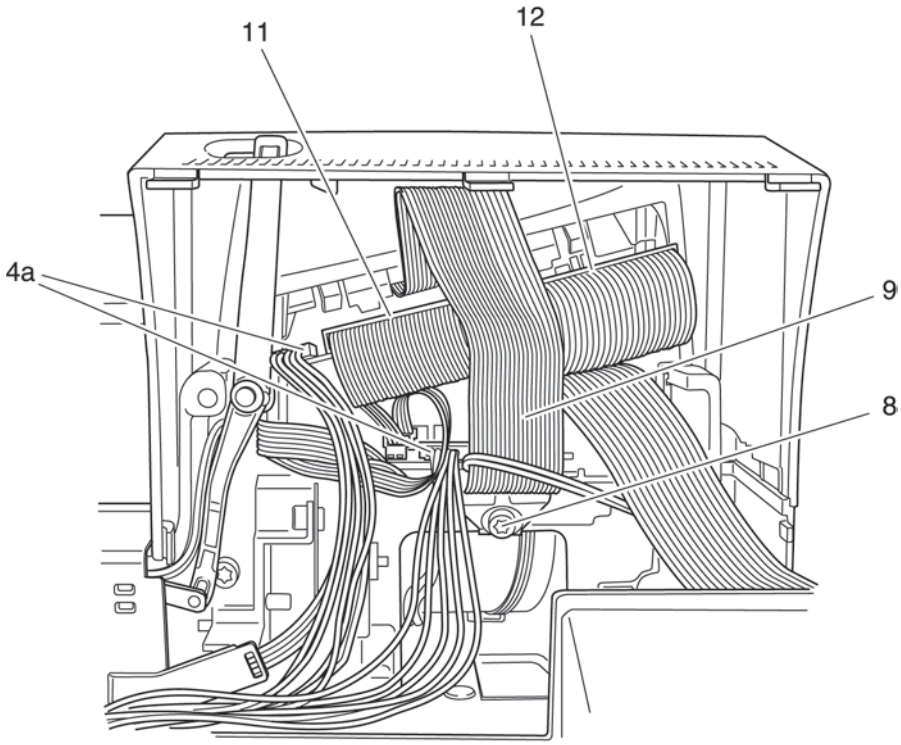

Fig. 31a

- Remove both screws 13 of the free-arm cover (fig. 31b).
- Bring the feed-dog lowering mechanism to its normal working position.
- Using a small screwdriver disengage both feed regulators 14.
- Remove the free-arm cover.
- Remove the needle plate.
- Remove both screws 15 (fig. 31c).
- Remove the upper free-arm cover.
- Loosen the screw of the face cover.
- Place the complete face cover as well as the sewing lamp and cable aside.
- Loosen screw 16 (fig. 31d)
- Remove the sewing lamp and the cable from the guide.
- Place the face cover aside.
- Loosen the four screws 17 to 20 (fig. 31e)
- Loosen the snap connections by pressing with your thumb on the spots marked with arrows on the inner surface of the arm.
- Raise the front housing shell a little and remove the two-connection plug of the connection cable.
- Remove the complete front housing shell carefully.

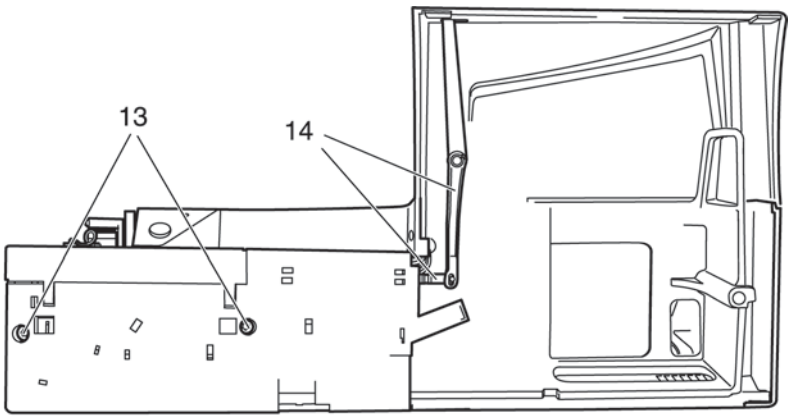

Fig. 31b

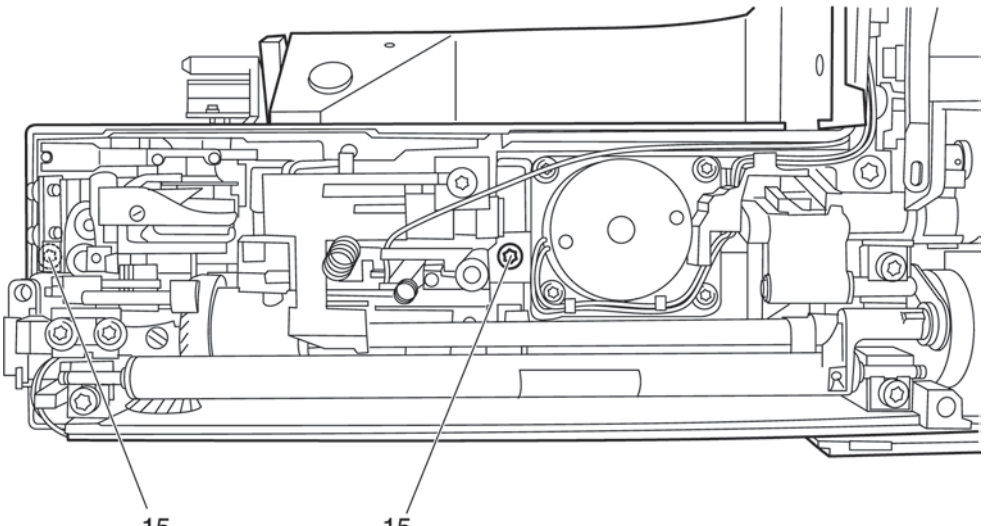

Fig. 31c

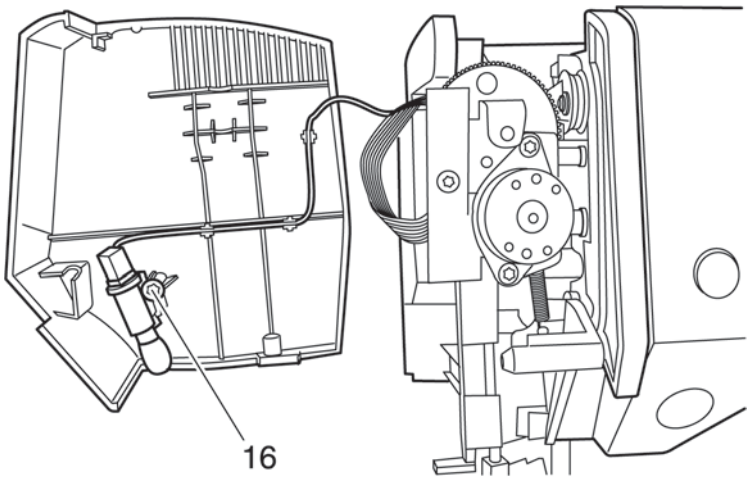

Fig. 31d

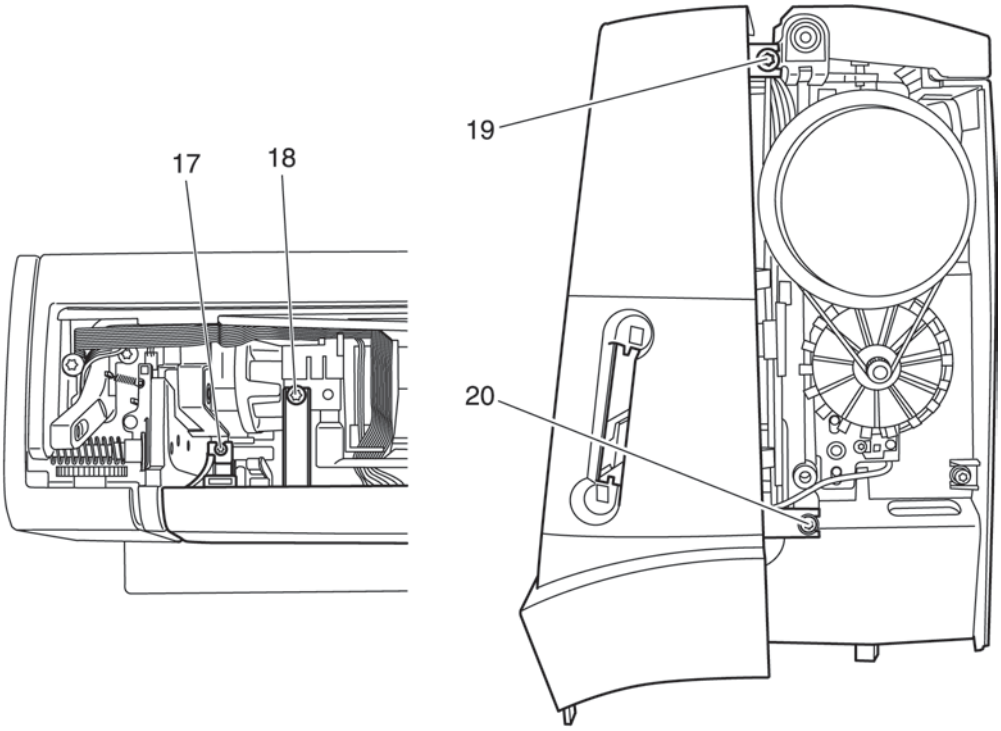

Fig. 31e

32. Changing the main circuit board

Removal:

- Remove the housing shell as described in section 31 of this manual.
- Disconnect plug 118 of the connection cable from the circuit board (fig. 32).
- Remove the three screws 119
- Turn around the circuit board and place it next to the housing shell (fig. 32a).
- Carefully disconnect plug 120 of the connection cable.
- Push the strip terminal of pin socket 121 to the front and disconnect flat cable 122.
- Place the circuit board aside.

Refitting:

- Place the circuit board next to the housing shell.
- Insert flat cable 122 in pin socket 121.
- Secure flat cable 122 by pushing the strip terminal of pin socket 121 to the back.
- Fit plug 120 of the connection cable (fig. 32).
- Mount the circuit board in the housing shell.
- Position the circuit board and insert the screws 119.
- Tighten the screws 119.
- Fit plug 118 of the connection cable.
- Refit the housing shell as described in section 36 of this manual.

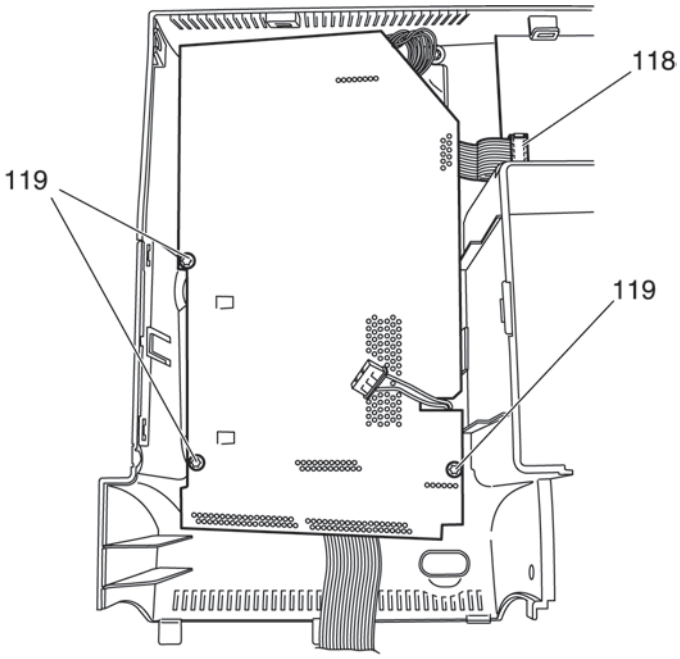

Fig. 32

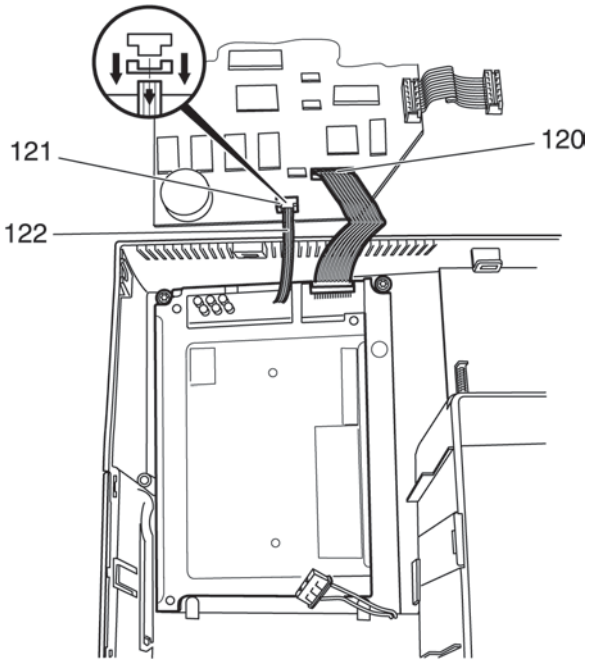

Fig. 32a

33. Changing the display with the touch-screen

Removal:

- Remove the housing shell as described in section 31 of this manual.
- Remove the circuit board as described in section 32 of this manual.
- Remove both screws 123 (fig. 33).
- Remove the display complete with the touch-screen.

Refitting:

- Fit the display complete with the touch-screen into the housing shell.
- Position the display and fit the screws 123.
- Tighten both screws 123.
- Install the circuit board as described in section 32 of this manual.
- Fit the housing shell as described in section 36 of this manual.

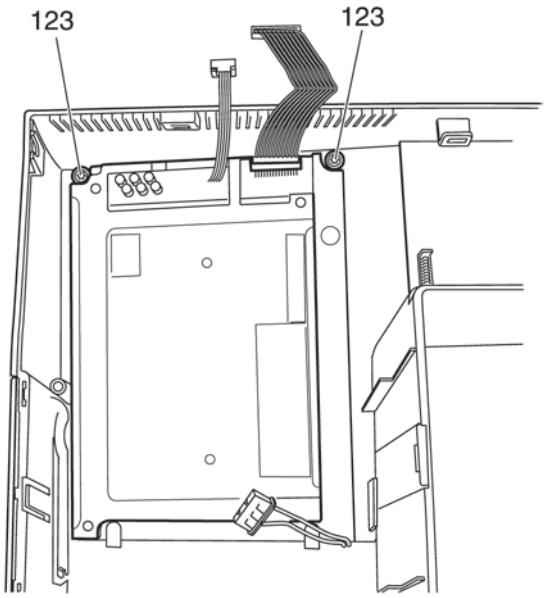

Fig. 33

34. Changing the circuit board of the control panel

Removal:

- Remove the housing shell as described in section 31 of this manual.
- Disconnect plug 118 of the connection cable from the circuit board of the control panel (fig. 34).
- Disconnect the three-connection plug 124 of the flat cable on the circuit board of the control panel.
- Remove the three fastening screws 125.
- Slightly raise the circuit board of the control panel while pushing down the plug 126 of the small circuit board.
- Remove the circuit board of the control panel.
- Remove all the buttons of the control panel.
- Remove fastening screw 127.
- Remove the small circuit board of the reverse button.

Refitting:

- Fit the reverse button.
- Fit the small circuit board.
- Secure the circuit board with fastening screw 127.
- Fit all the buttons of the control panel.
- Mount plug 126 on the circuit board of the control panel.
- Fit the circuit board of the control panel.
- Fit and tighten the three fastening screws 125.
- Mount the three-connection plug 124 of the flat cable on the circuit board of the control panel.
- Mount plug 118 of the connection cable on the circuit board of the control panel.
- Refit the housing shell as described in section 36 of this manual.

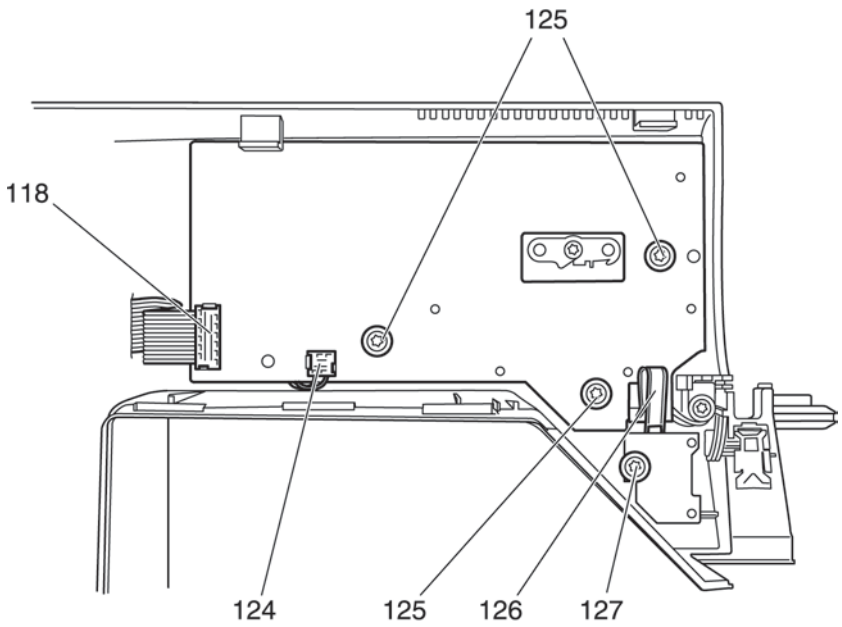

Fig. 34

35. Changing the circuit board

Removal:

- Remove the housing shell as described in section 31 of this manual
- Disconnect the eleven connection plugs 21 to 31 of the flat cables from the circuit board (fig. 35).
- Unscrew both screws 32.
- Lift the latches 33 of circuit board bracket 34 only 1 to 2 mm and remove the complete circuit board.
- Using a small screwdriver push the prong 35 of circuit board bracket 34 a little bit aside (fig. 35a).
- At the same time remove inverter 36 with an upward movement.

Refitting:

- Fit inverter 36.
- Fit the circuit board into the circuit board bracket.
- The circuit board must be positioned correctly and the latches 33 must be properly engaged (fig. 35).
- Fit and tighten both screws 32.
- Mount the eleven connection plugs 21 to 31 of the flat cables on the circuit board.
- Fit the housing shell as described in section 36 of this manual.

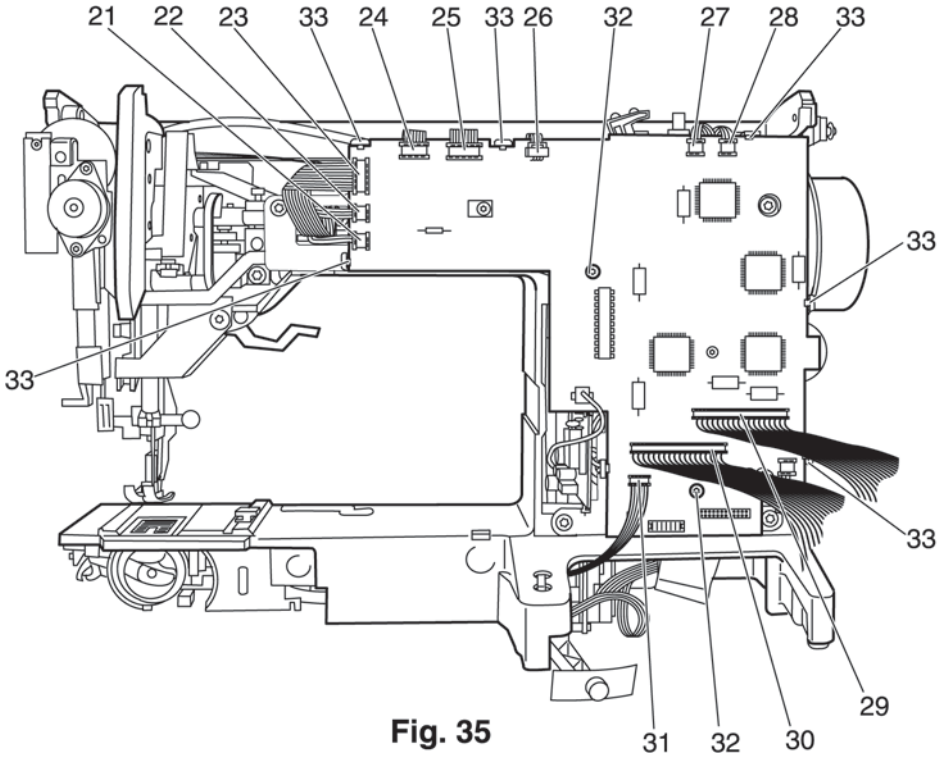

Fig. 35

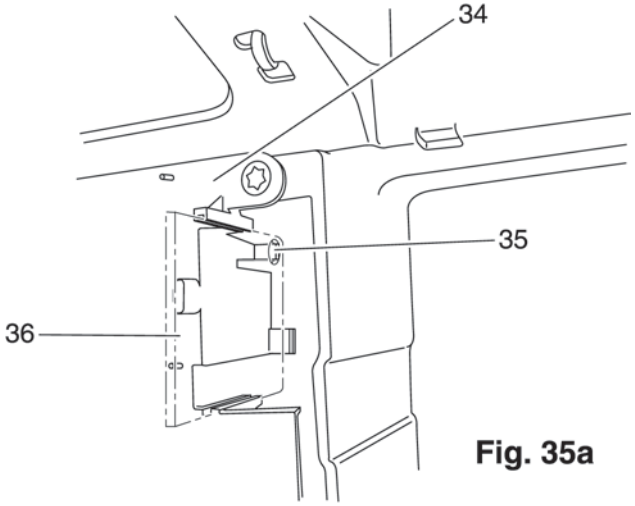

Fig. 35a

36. Fitting the front housing shell

- Fit the front housing shell completely onto the machine.
- Lift the front housing insert slightly and mount the two-connection plug of the connection cable of the display.
- Press the housing insert slightly downwards and tighten the four screws 17 to 20 (fig. 36).

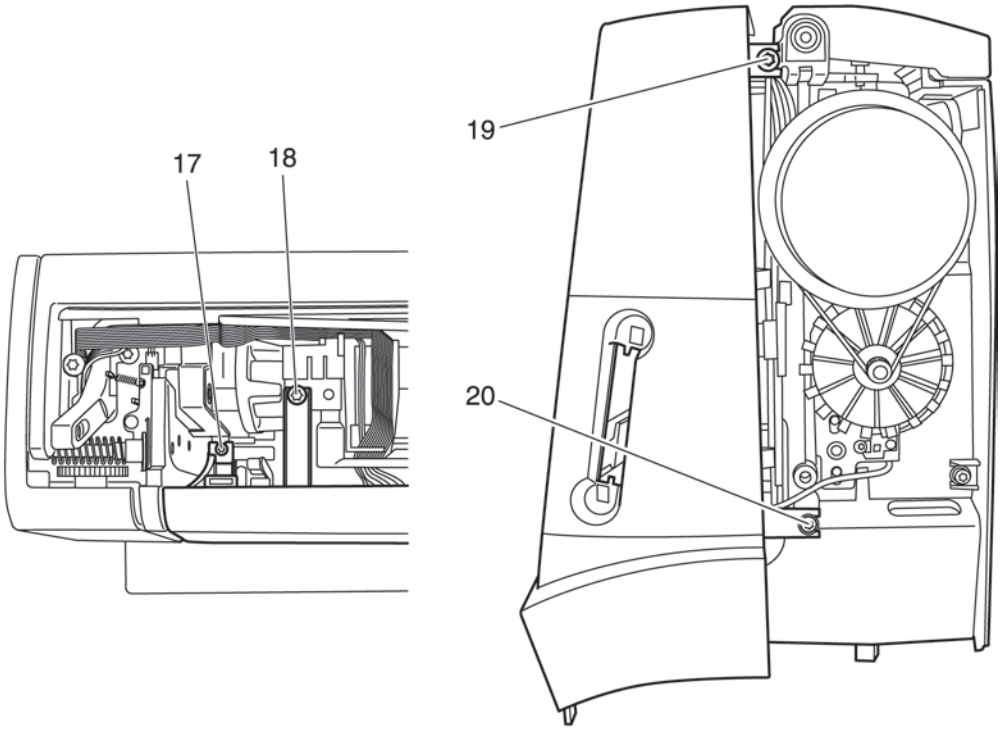

Fig. 36

- Fit the upper free-arm cover.
- Insert and tighten both screws 15 (fig. 36a).
- Fit the needle plate.
- Fit the free-arm cover.
- Bring the feed-dog lowering mechanism to its normal working position.
- Using a small screwdriver engage both switch levers 14.
- Fit and tighten both screws 13 of the free-arm cover (fig. 36b).

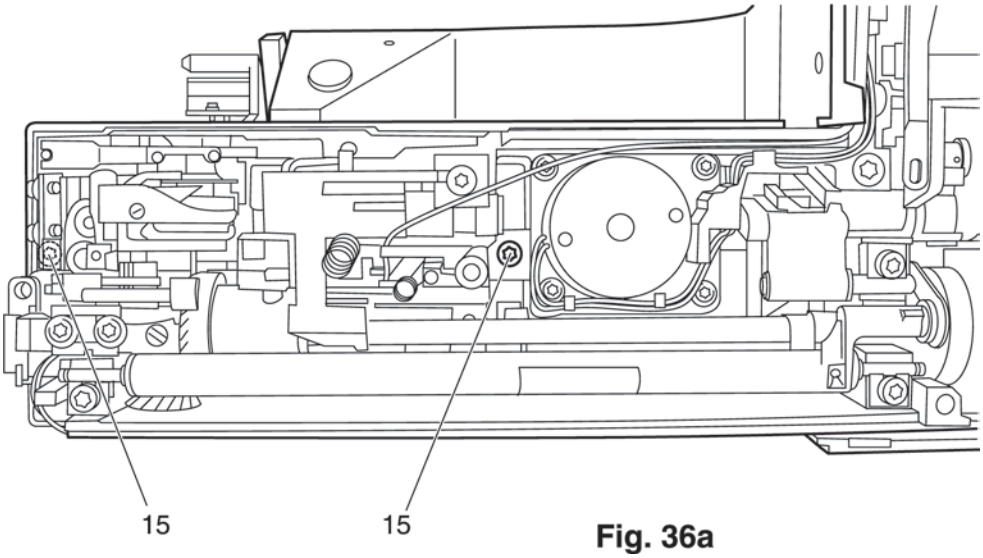

Fig. 36a

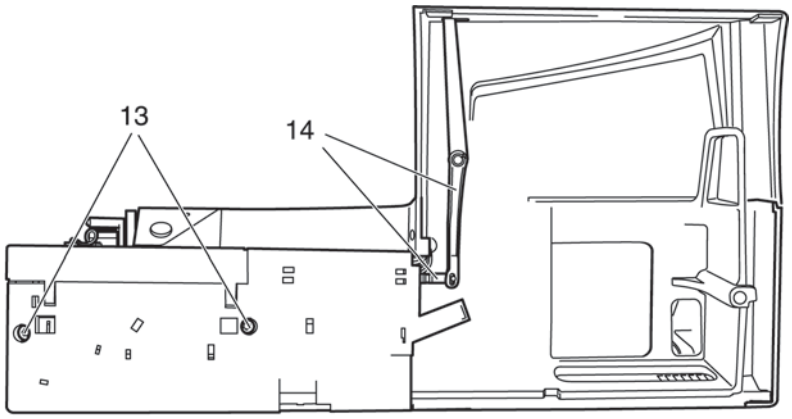

Fig. 36b

- Mount plugs 11 and 12 of the connection cables (fig. 36c.).
- Mount plug 10 for the flat cable of the free-arm cover on the circuit board.
- Place the complete baseplate against the machine.
- Mount plugs 4a of the connection cables on the circuit board.
- Fit ground strap 9 and secure it with screw 8.
- Mount the three connection plugs 3, 6 and 7 on the circuit board (fig. 36d).
- Insert the cables in the cable guides.
- Fold the baseplate against the machine and secure it with the three screws.
- Fit the sewing lamp into the guide of the face cover (fig. 36e).
- Tighten screw 16.
- Insert the cables in the cable guide.
- Fit and secure the face cover.
- After a running-in time of 10 to 15 min. check the machine as described in section 23 of this manual.

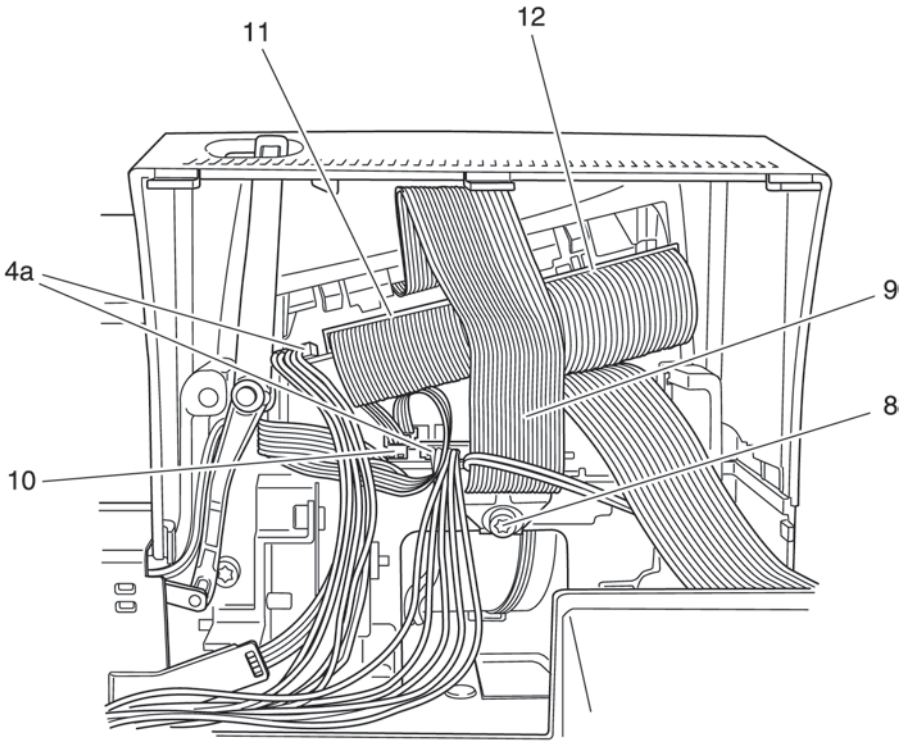

Fig. 36c

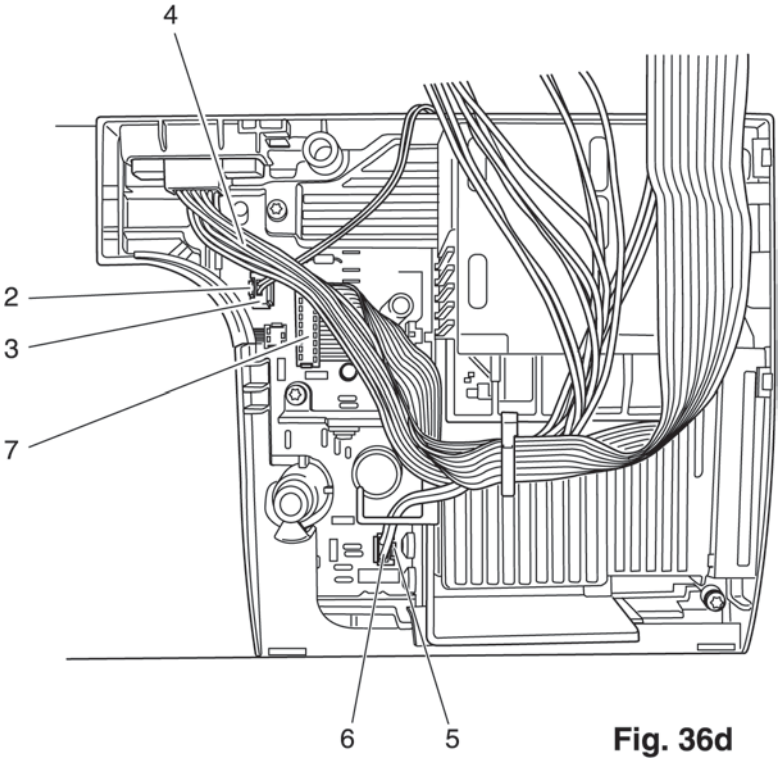

Fig. 36d

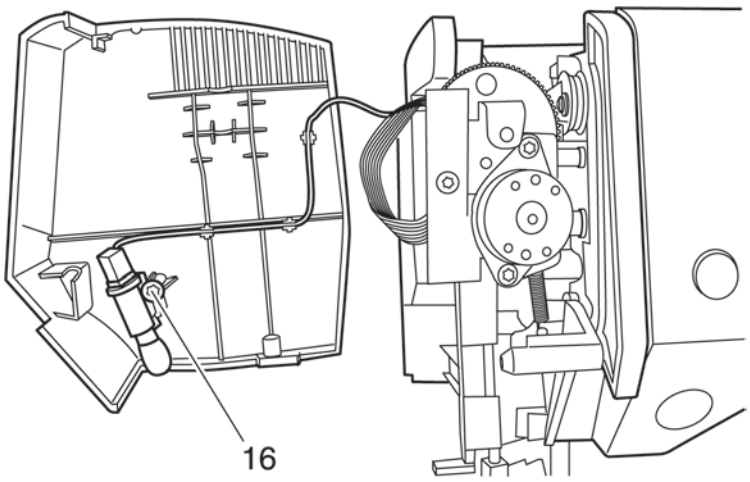

Fig. 36e

37. Changing the synchronizer circuit board

Removal:

- Remove the machine's main plug.
- Remove the needle and the presser foot holder complete.
- Remove the detachable work support.
- Remove the housing covers as described in this manual.
- Remove the three flat cables from the cable guide.
- Remove the cable guide.
- Using a Torx offset screwdriver TX 15 unscrew the fastening screw 128 of circuit board 129 (fig. 37).
- Remove circuit board 129 completely.

Refitting:

- Fit circuit board 129.
- Fit and tighten fastening screw 128.

Note:
Circuit board 129 must be positioned in such a way that the lobes of cam 130 rest in the center of the circuit board guides 131 (fig. 37a).

- Fit the cable guide.
- Insert the three flat cables in the cable guide.
- Fit the housing covers as described in this manual.
- After a running-in time of 10 to 15 min. check the machine as described in section 23 of this manual.

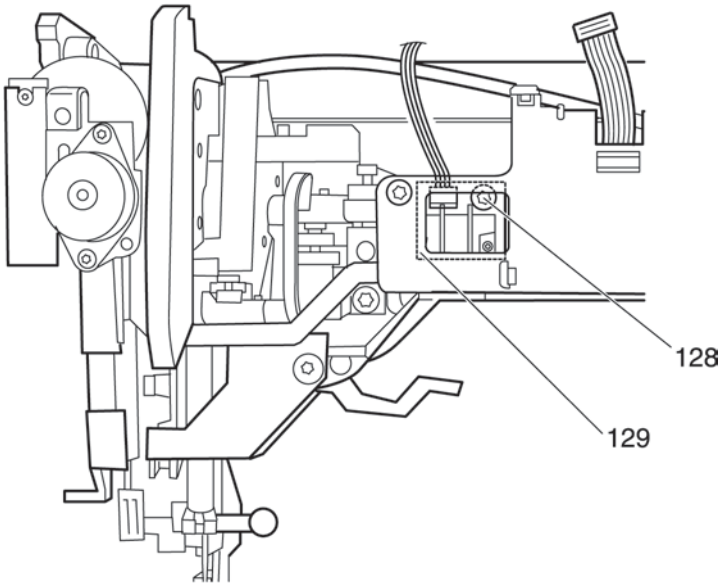

Fig. 37

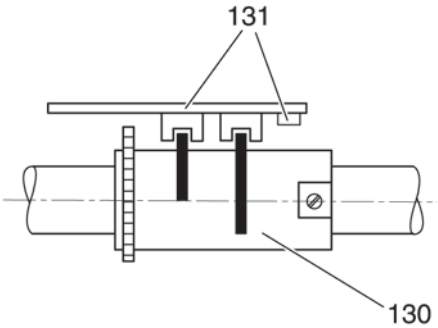

Fig. 37a

38. Changing the motor

Note:

The motor must be replaced as a complete unit.

Removal:

- Disconnect the machine lead cord.
- Remove the detachable work support.
- Remove the folding cover.
- Remove the two screws of the housing insert.
- Remove the housing insert.
- Loosen screw 1 of the standard cover (fig 38).
- Remove the standard cover carefully.
- Remove screw 132 of the forked photocell barrier (fig. 38a).
- Place the complete forked photocell barrier a little bit aside.
- Remove screw 133 of the motor bracket.
- Remove the toothed belt 134 of the motor (fig. 38b).
- Take the complete motor out of the housing.
- Disconnect both cable plugs 135 from the motor (fig. 38a).
- Place the motor aside.

Refitting:

- Place toothed belt 134 on the handwheel.
- Set the motor against the housing and connect both cable plugs 135 (fig. 38a).
- Fit the motor and insert speedometer pinion 136 in the toothed belt 134 of the motor.
- Slightly tighten screw 133 of the motor bracket (fig. 38b).
- Set the tension of the toothed belt by shifting the motor bracket.
- Tighten screw 133.
- Fit the forked photocell barrier and insert fastening screw 132 (fig. 38a).
- Set the clearance between the forked photocell barrier and speedometer pinion 136 to approximately 0.3 mm.
- Tighten screw 133.
- Attach and secure the standard cover and the housing insert.
- Connect the mains plug and trial-run the machine.

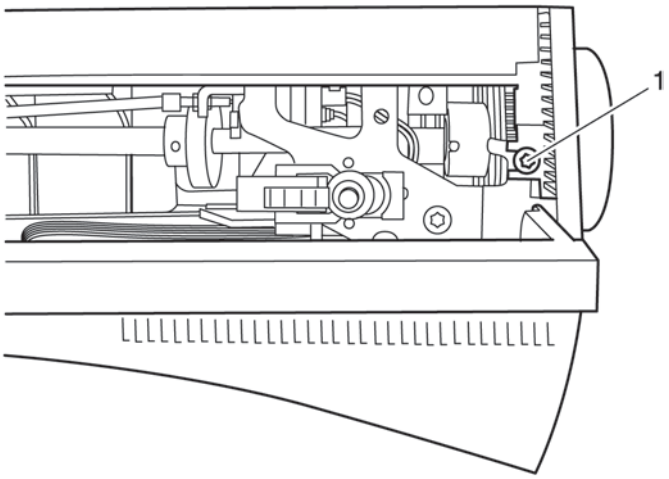

Fig. 38

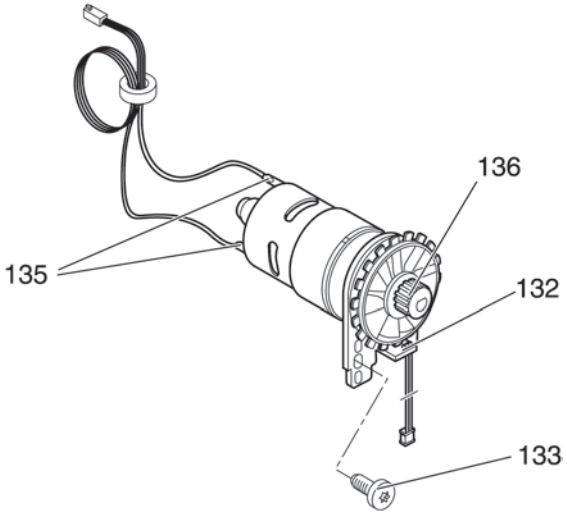

Fig. 38a

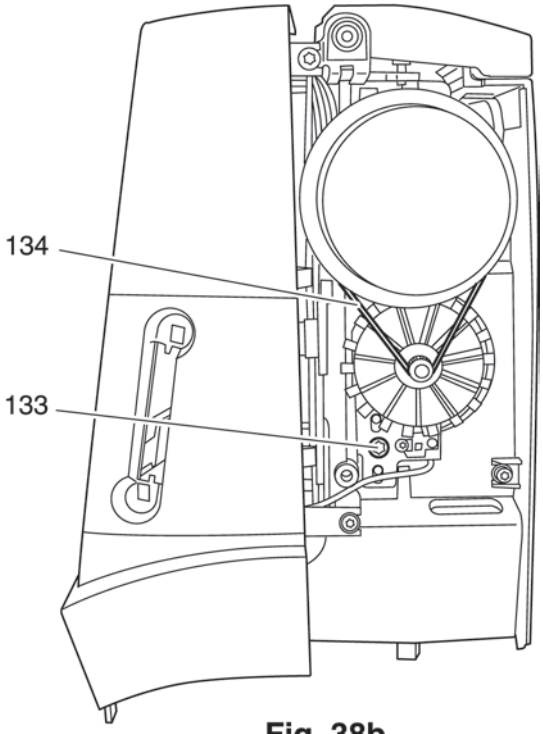

Fig. 38b

39. Changing the cable reel in the foot control

Note:

In Germany the foot control must be replaced with the cable reel.

Removal of the cable reel:

- Lift rubber strip 137 and remove it with its three feet (fig. 39).
- Pull out both plugs 138.
- Remove the four Phillips screws 139.
- Remove housing cover 140.
- Remove the rectangular pedal 141 with guide 142 and take out contact spring 143.
- Disconnect the right pressure spring 144.
- Disconnect the right cable 145 with the contact eyelet (fig. 39a).
- Press out or pull out cemented resistor track 146 (20-KW-potentiometer) upwards with a screwdriver or a pair of pliers.
- Remove cable reel 147.

Refitting:

- Pull out the cable about 10 cm and fit cable reel 147 into the housing.
- Insert the soldered resistor track 146 fully downwards in the guide and secure it with some adhesive.
- Push the soldered contact eyelet 145 onto the right guide pin.
- Place both cables in the respective guide grooves.
- Fit contact spring 143 onto the guide pin into the larger right section of pedal 141.
- Push pressure spring 144 onto the same guide pin.
- Turn pedal 141 around and push the right spring 144 on the right guide pin of the housing and the left spring 148 on the left guide pin in pedal 141
- First press the pedal a little to the right and then downwards in such a way that contact spring 143 is on the right-hand side of resistor track 146 and not bent.
- Press the pedal further down, as far as it will go; at the same time insert guide 142 in its two open bearings.
- Hold pedal 141 in this position; at the same time fit housing cover 140 and press it firmly on the housing (fig. 39).
- Insert and tighten the four Phillips screws 139.
- Insert rubber strip 137 and both plugs 138.
- Carry out a function check.

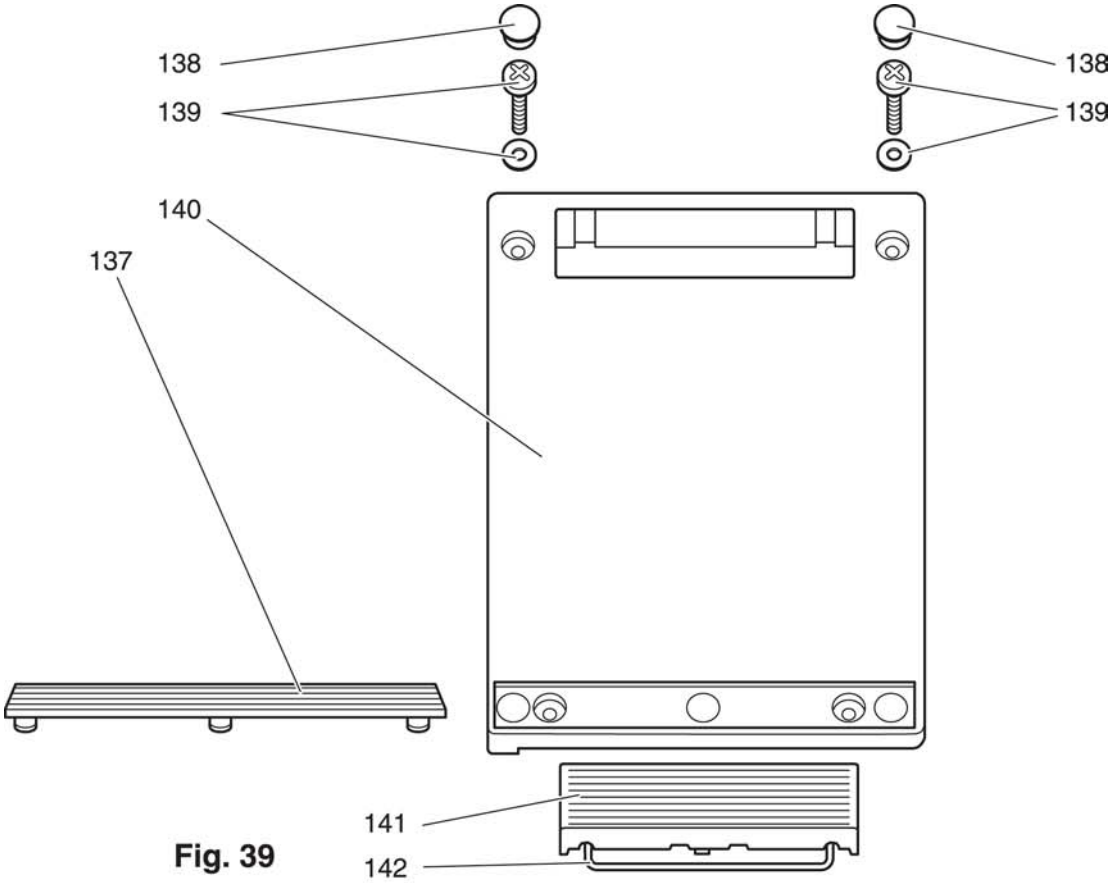

Fig. 39

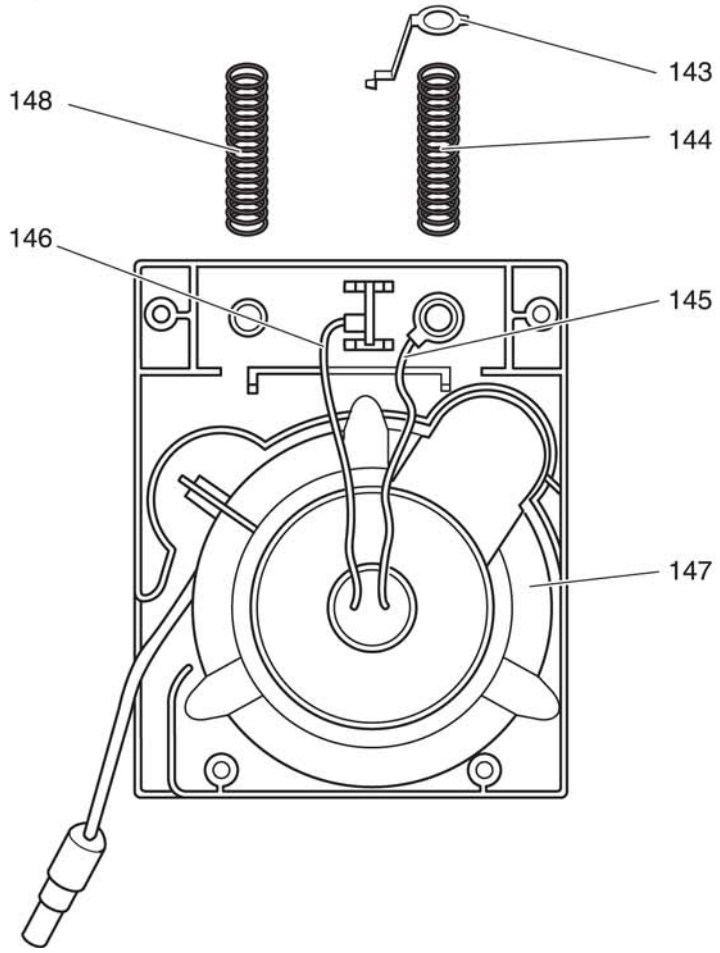

Fig. 39a

40. Changing the upper stepping motor

Note:

The stepping motor for sideways needle bar movement must be replaced as a complete unit.

Removal:

- Remove machine's mains plug.
- Remove detachable work support.
- Remove the housing covers as described in this manual.
- Remove retaining washer 79 from bolt 80 (fig. 40).
- Remove the bolt and carrying handle 81.
- Turn out the screws 149 of the bobbin winder and SD motor unit (fig. 40a).
- Carefully place the bobbin winder and SD motor unit aside.
- Remove circlip 150 on zigzag stepping motor 48 (fig. 40b).
- Disengage connecting rod 103 and the toothed segment of zigzag stepping motor 48.
- Unscrew both fastening screws 47.
- Lift zigzag stepping motor 48 upwards out of the retainer in the direction of the arm shaft.
- Remove zigzag stepping motor to the front out of the housing.

Refitting:

- Install zigzag stepping motor 48 in the housing.
- Pull power cable downward.
- Insert and lightly tighten both fastening screws 47.
- Insert the pin of connecting rod 103 in the hole of the toothed segment (fig. 40b).
- Attach circlip 150.
- Install the bobbin winder and SD-motor unit and place the power cable at the bottom.
- Tighten the fastening screws 149 of the bobbin winder and SD-motor unit
- Fit carrying handle 81.
- Insert bolt 80 and attach retaining washer 79.
- Mount the housing covers according to this service manual.

Now the following adjustments have to be checked or carried out again.

- Section 10: Adjustment of embroidery foot
- Section 11: Adjustment of needle in needle hole
- Carry out a check of all functions.

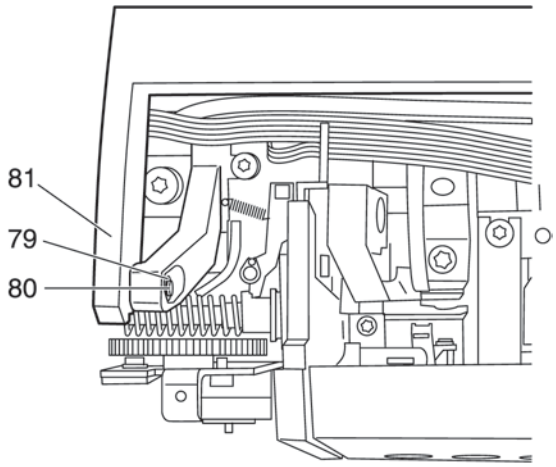

Fig. 40

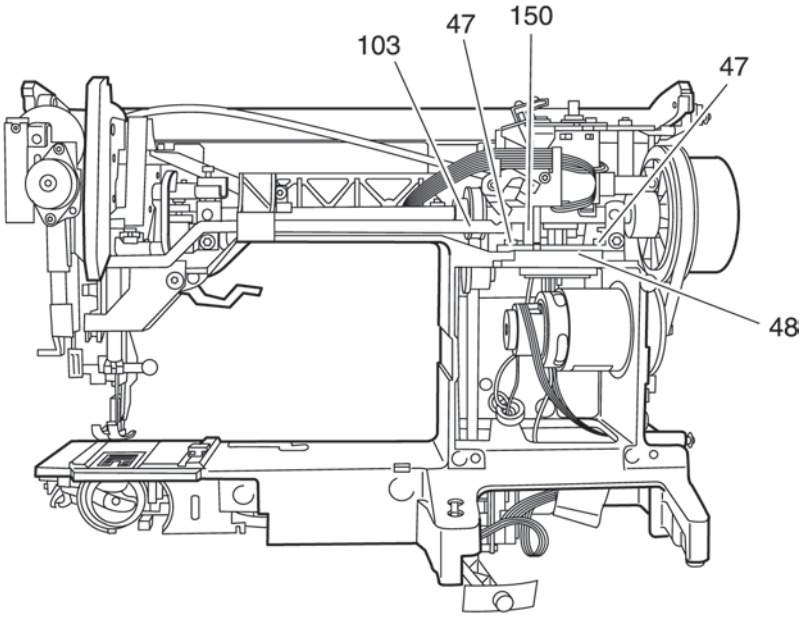

Fig. 40b

41. Changing the lower stepping motor

Note:

The feed stepping motor must be replaced as a complete unit.

Removal:

- Disconnect the machine lead cord.
- Remove the detachable work support.
- Remove the housing covers as described in this manual.
- Remove tension spring 14 (fig. 51).
- Remove fastening screw 18.
- Remove clamping plate 18a.
- Turn the handwheel until the lobe of feeding eccentric 20 is positioned at the rear.
- Fold feed regulator 9 downwards, remove this, and link 11 from the connecting bar pin to the left.
- Remove slide block 12 with the spring to the right.
- Remove both screws 16 of the feed stepping motor.
- Remove the feed stepping motor together with angular bracket 151 and retaining spring 15a.

Refitting:

- Insert feed stepping motor complete with bracket 151.
- Insert and slightly tighten the upper fastening screw 16.
- Insert and slightly tighten clamp spring 15a and the fastening screw 16.
- Push slide block 12 with the spring onto the bolt and insert it in guide slot 13 in the correct curve adius.
- Check that the slide block moves freely, but without play or binding, in the guide slot.
- Push guide lever 15 of the stepping motor carefully to the left, until there is a clearance of 0.05 mm between slide block 12 and connecting bar 10.
- Tighten the fastening screws 16 and check that the slide block moves easily, but without play.
- Push link 11 complete with feed regulator 9 onto the connecting bar pin.
- Fold feed regulator 9 back and then upwards over feeding eccentric 20.
- Insert fastening screw 18 and clamping plate 18a and tighten them only a little.
- Shift bolt 19 laterally so that link 11 and connecting bar 10 still have a slight play and can move freely.
- Tighten screw 18.
- Connect tension spring 14.
- Mount the housing covers as described in this service manual.
- After a running-in time of 10 to 15 minutes check the machine as described in section 23 off this manual.

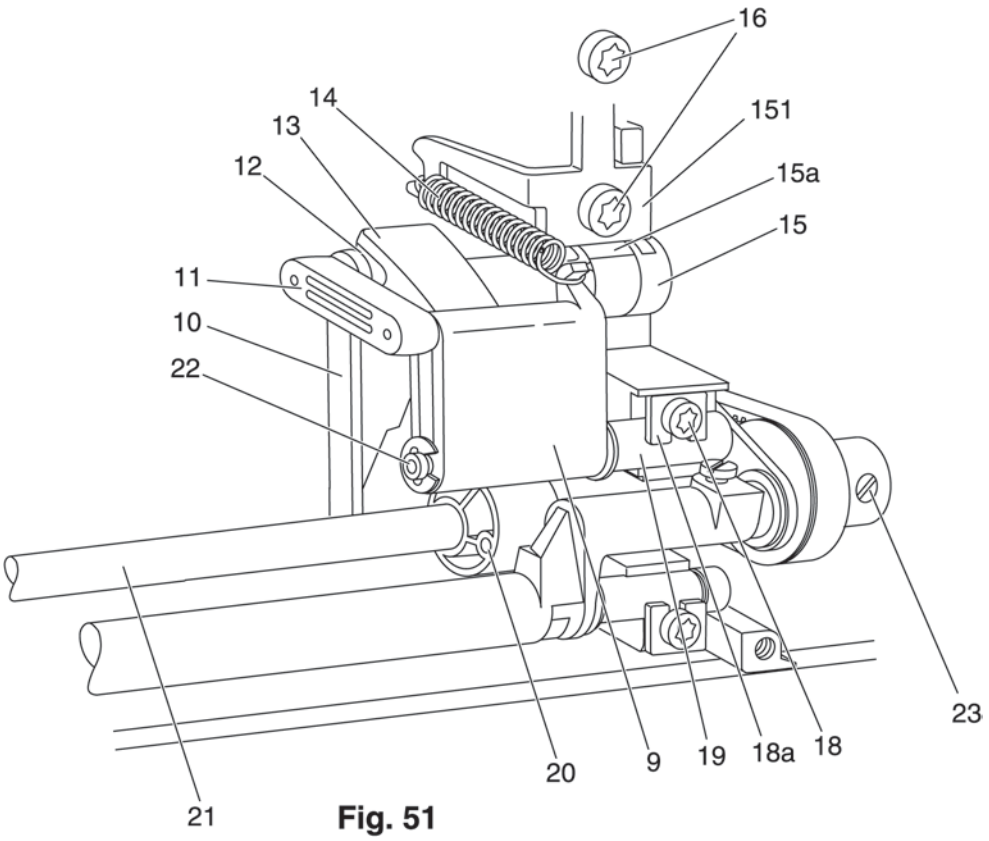

Fig. 51

42. Changing the transverse-feed stepping motor

Note:

The transverse-feed stepping motor must be replaced as a complete unit.

Removal:

- Disconnect the machine lead cord.
- Remove the detachable work support.
- Remove the housing covers as described in this manual.
- Remove the buttonhole sensor and place it aside.
- Remove the circuit board as described in section 35 of this manual.
- Remove the four fastening screws 35 of circuit board bracket 34 (fig. 42).
- Slightly raise circuit board bracket 34 and remove the flat cables from their guides.
- Remove circuit board bracket 34.
- Remove the three fastening screws 24 (fig. 42a).
- Pull the transverse-feed stepping motor slightly.
- Disconnect tension spring 152 of the transverse-feed stepping motor (fig. 42b).
- Remove the transverse-feed stepping motor.

Refitting:

Note:
Make sure that the tension spring 152 of the transverse-feed stepping motor is connected at the feed dog. If necessary connect it.

- Connect tension spring 152 at the transverse-feed stepping motor and fit the transverse-feed stepping motor.
- Insert and slightly tighten the three fastening screws 24 (fig. 42a).
- Place the flat cable into the guides of circuit board bracket 34.
- Attach circuit board bracket 34 and secure it with the four fastening screws 35 (fig. 42).
- Install the circuit board as described in section 35 of this manual.
- Refit the housing covers as described in this manual but place the baseplate next to the machine.
- Adjust the feed dog in sideways direction as described in section 4 of this manual.
- Insert the buttonhole sensor.
- Fit the free-arm cover and the bobbin thread monitor.
- Fold the baseplate against the machine and secure it with three screws.
- After a running-in time of 10 to 15 minutes check the machine as described in section 23 off this manual.

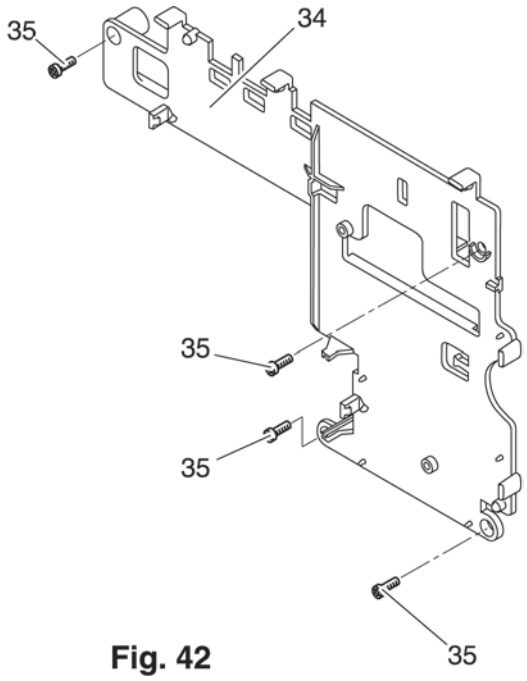

Fig. 42

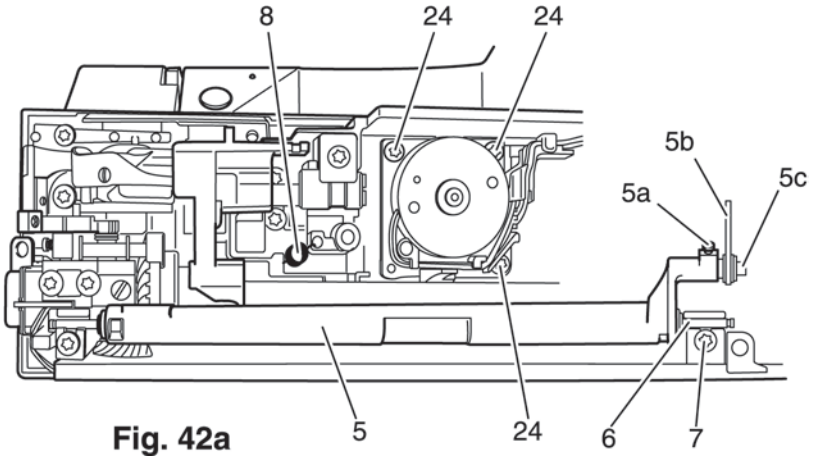

Fig. 42a

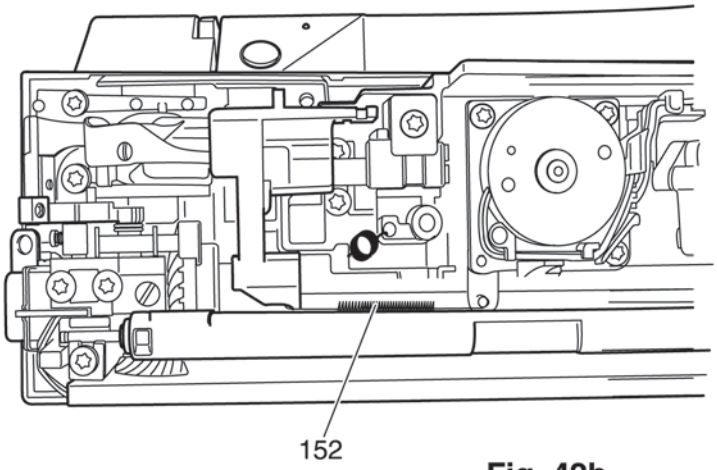

Fig. 42b

43. Changing the buttonhole sensor

Note:

The buttonhole sensor must be replaced as a complete unit.

Removal:

- Disconnect the machine lead cord.
- Remove the needle and the presser foot.
- Remove the detachable work support.
- Remove the housing covers as described in this manual.
- Remove Seeger circlip ring 153 (fig. 43).
- Remove lowering lever 154.
- Remove plug 30 of the flat cable from the circuit board (fig. 43a).
- Cut off cable clip 155 with a knife (fig. 43b).
- Remove buttonhole sensor 156 complete with spring.

Refitting:

- Install buttonhole sensor 156 complete with spring.
- Place the flat cable into the housing of the machine.
- Insert cable clip 155 from the top and pull it together.
- Cut off the protruding end of cable clip 155.
- Fit lowering lever 154 (fig. 43).
- Mount Seeger circlip ring 153 and seal lowering lever.
- Mount connection plug 30 of the flat cable on the circuit board (fig. 43a).
- Refit the housing covers as described in this manual.
- Carry out a function check.

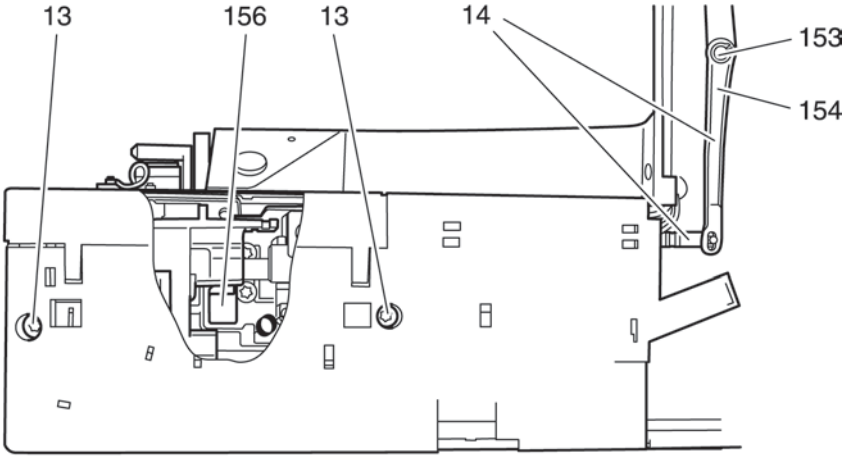

Fig. 43

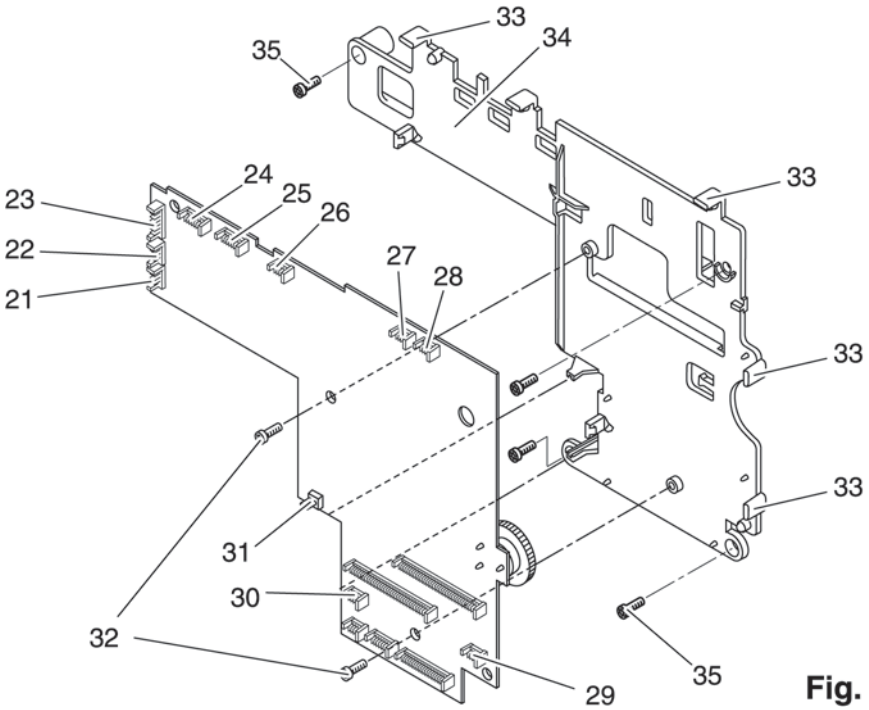

Fig. 43a

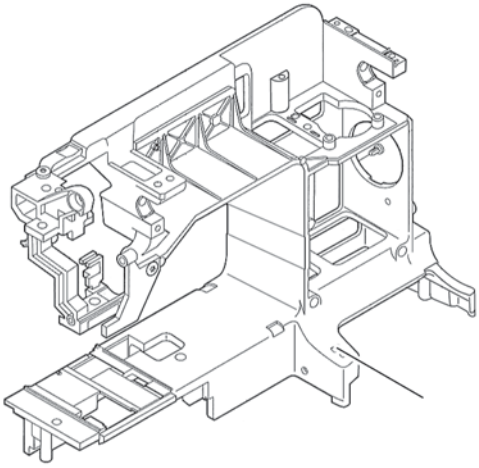

44. Changing the free-arm cover

Note:

The thread monitor must be replaced as a complete unit with the free-arm cover.

Removal:

- Disconnect the machine lead cord.
- Remove the needle and the presser foot.
- Lay the machine on its back.
- Remove the three screws of the baseplate.
- Tilt the baseplate to the front carefully.
- Raise latch 2 only 1 to 2 mm (fig. 44).
- Disconnect the two-connection plug 3 of the thread cutter from the pin socket.
- Disconnect connection cables 4 and 7 from the cable guides.
- Carefully place the baseplate next to the machine.
- Disconnect plug 10 of the flat cable of the free-arm cover from the circuit board. (fig. 44a).
- Remove both fastening screws 13 of the free-arm cover (fig. 44b).
- Bring the feed-dog lowering mechanism to its normal working position.
- Disengage both feed regulators 14 using a small screwdriver.
- Remove the free-arm cover (fig. 44a).

Refitting:

- Mount the free-arm cover.
- Bring the feed-dog lowering mechanism to its normal working position.
- Engage both feed regulators 14.
- Insert and tighten both fastening screws 13 (fig. 44b).
- Mount plug 10 of the flat cable of the free-arm cover on the circuit board (fig. 44a).
- Place the baseplate in front of the machine.
- Insert the two-connection plug 3 of the thread cutter in the pin socket (fig. 44).
- Place connection cables 4 and 7 into the cable guides.
- Fold the baseplate against the machine and secure it with three fastening screws.
- Connect in the mains plug.
- Check the function of the thread monitor with full and empty bobbin.

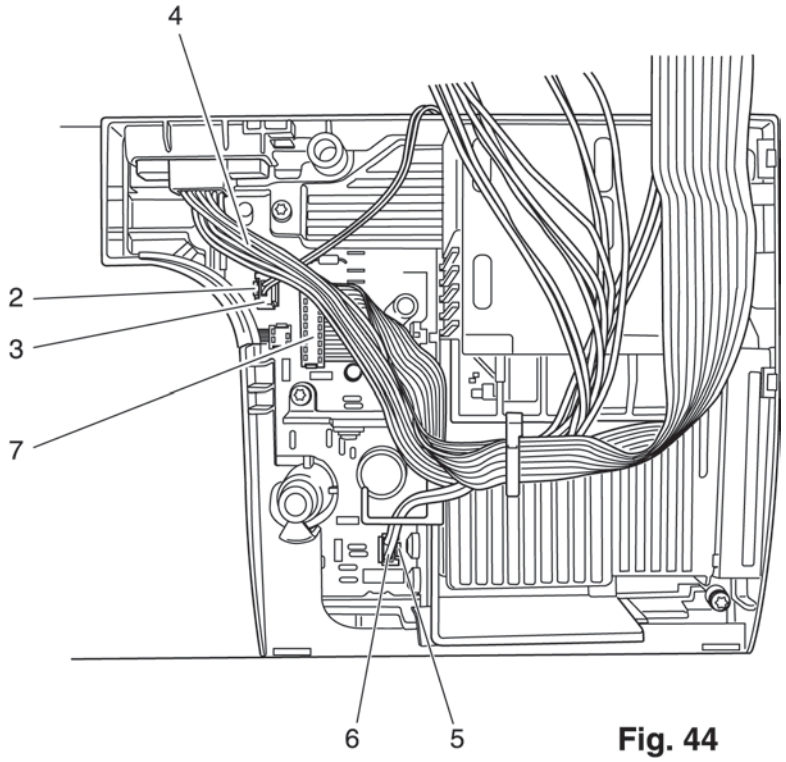

Fig. 44

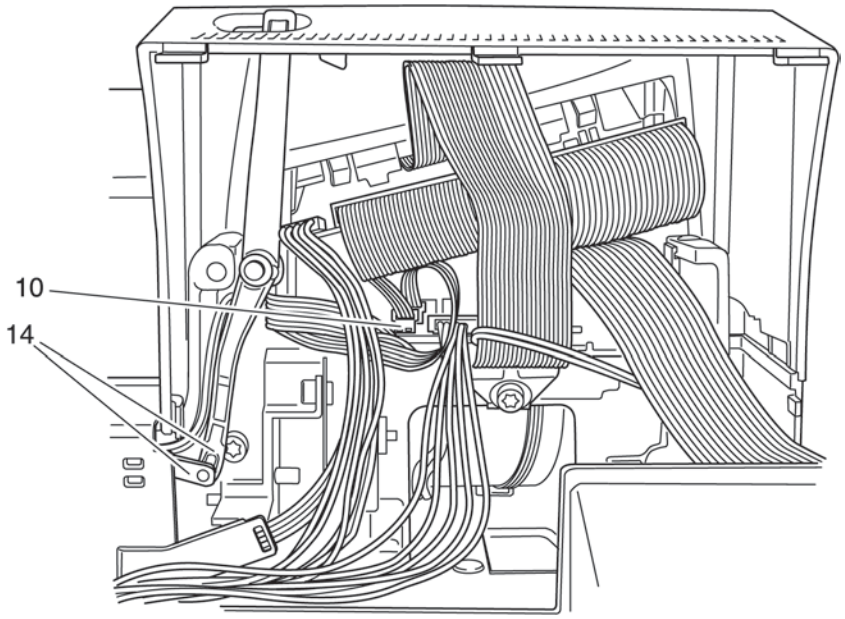

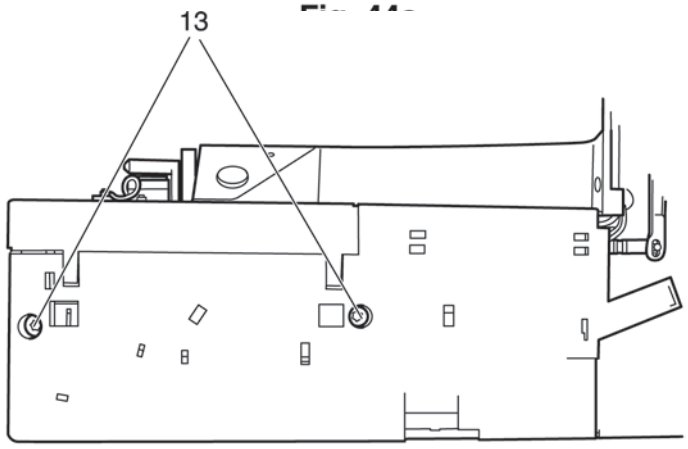

Fig. 44b

45. Changing the needle threader

Note:

The needle threader is only exchanged complete with the threader bar frame.

Removal:

- Remove the machine's mains lead.
- Remove the needle and the presser foot.
- Press threader key 70 down completely and keep it pressed (fig. 45).
- Using a small screwdriver, raise bracket 157 of threader bar frame 158 slightly.
- Remove the complete threader bar frame downward from threader bar 159.

Fitting:

- Push the new threader bar frame together with the needle threader onto the threader bar, until bracket 157 clicks back into place.

Cross-check:

- Insert a new needle Nm 70.
- Move the needle threader up and down by pressing threader key 70.
- Carry out a visual check of the position of the needle-threader prong in the needle eye.
- If necessary, readjust the position according to section 19 of the service manual.

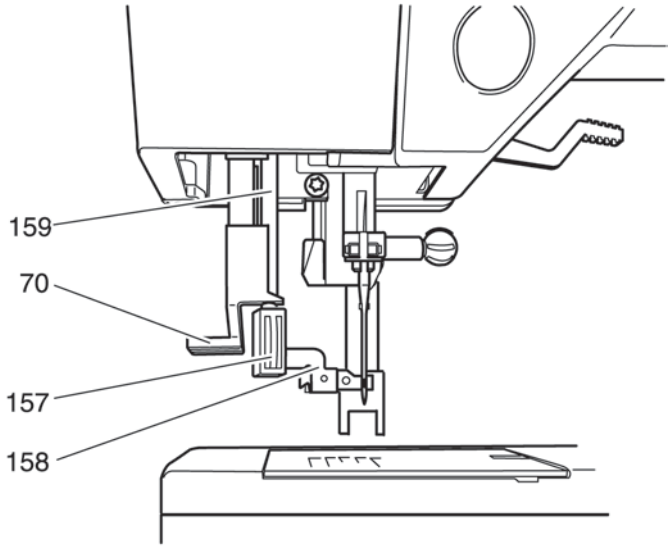

Fig. 45

46. Replacing the thread puller

Removal:

- Remove the machine´s main plug.
- Remove the needle and the presser foot shoe.
- Tilt the machine over backwards.
- Remove the base plate and the free arm cover as described in the adjustment and repair instructions.
- Unscrew screw 63 and remove bobbin case position finger 64 (Fig. 46).
- Release screw 160 and remove thread puller 161.

Fitting:

- Insert thread puller 161 and tighten screw 160 somewhat so that thread puller 161 can still be moved.
- Activate the thread puller 161 manually.
- Turn the handwheel until thread puller 161 has reached its right point of reversal (Fig. 46a).
- Turn thread puller 161 radially, until it rests on the hook race ring without play.
- Now move thread puller 161 axially until it is adjusted as shown in Fig. 46b.
- Tighten screw 160 (Fig. 46).
- Activate the thread puller 161 manually and check if there is no play between knife 162 and thread puller 161 in the position shown in Fig. 46b.
- Carry out a function check of the thread cutter.
- Insert bobbin case position finger 64 and screw 63.
- Adjust bobbin case position finger 64 in accordance with section 17 of the adjustment and repair instructions.
- Apply the base plate and the free arm cover as described in the adjustment and repair instructions.

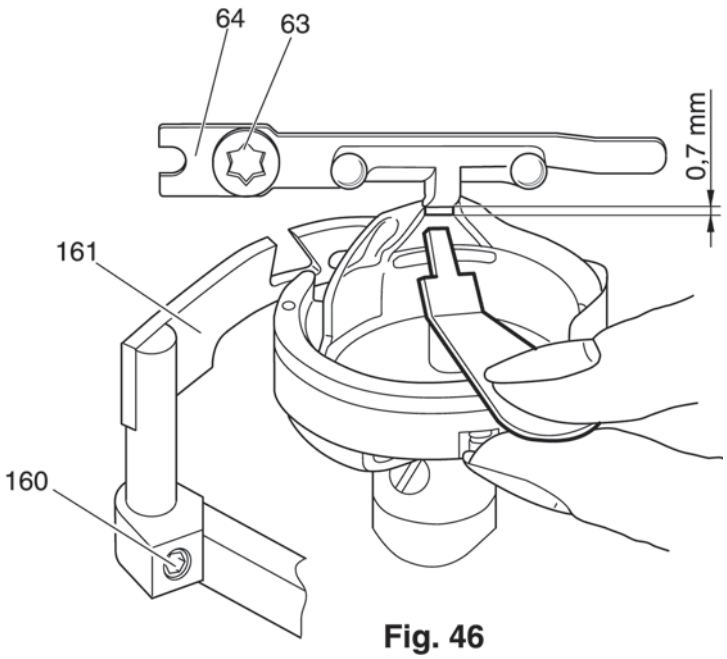

Fig. 46

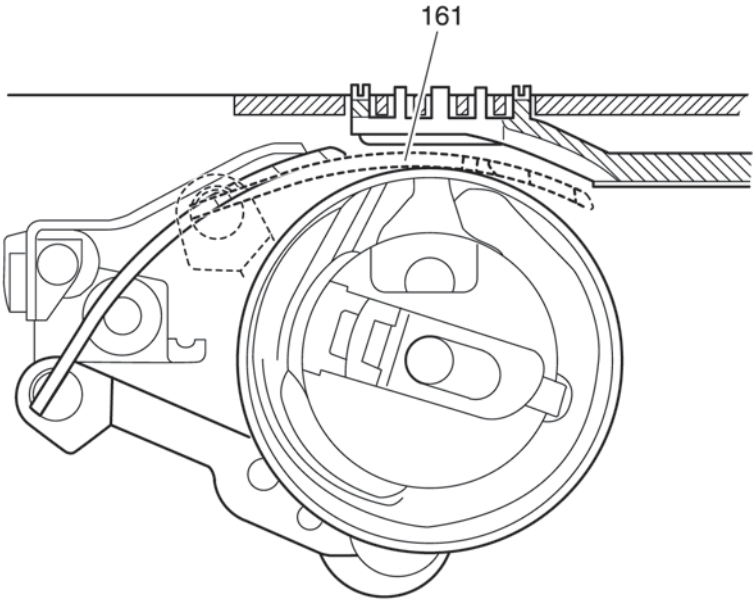

Fig. 46a

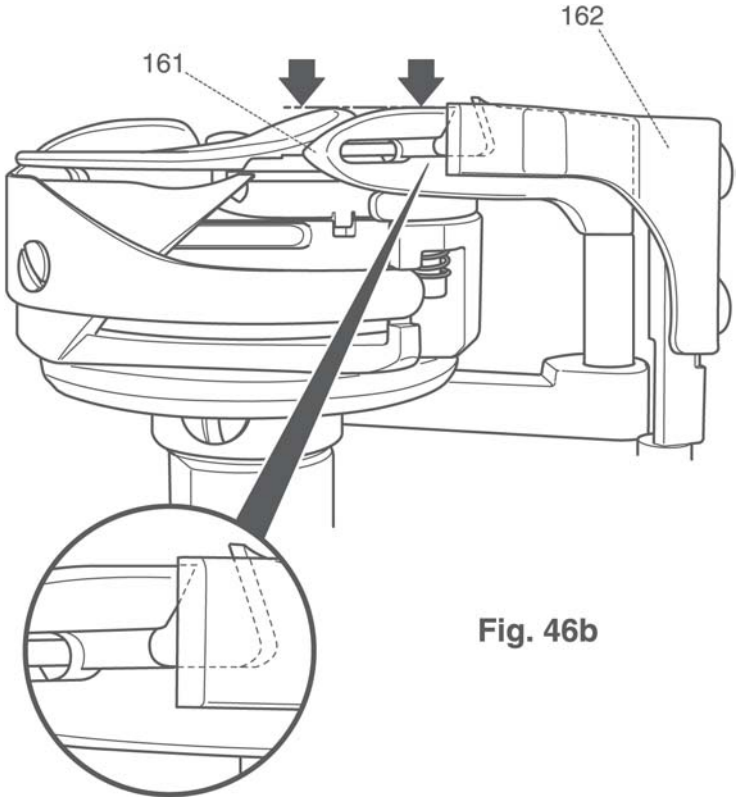

Fig. 46b

47. Replacing the knife

Removal:

- Remove the machine´s main plug.
- Remove the needle and the presser foot shoe.
- Tilt the machine over backwards.
- Remove the base plate and the free arm cover as described in the adjustment and repair instructions.
- Activate the thread cutter manually.
- Turn the handwheel until the thread cutter has reached its right point of reversal.
- Unscrew the screw 173 and take out knife bracket 174 cpl. (Fig. 47b).

Fitting:

- Insert knife bracket 174 cpl. and tighten screw 173.
- Turn the handwheel until the thread puller is positioned as shown in Fig. 47a.
- Release screw 173 somewhat (Fig. 47b).
- Turn the knife bracket cpl. 174 until there is no play between knife 162 and thread puller 161.
- Tighten screw 173 somewhat.
- Activate the thread cutter manually and check if there is no play between knife 162 and thread puller 161 in the position shown in Fig. 47a.

Note:

If knife 162 is not positioned according to Fig. 47a, proceed as follows:

- Release the front and rear screw 163 slightly (Fig. 47).
- Turn knife 162 about the point of rotation of the front screw 163, until the knife is lying parallel.
- Tighten the screws 163.
- Carry out a function check of the thread cutter.
- Apply the base plate and the free arm cover in accordance with the adjustment and repair instructions.

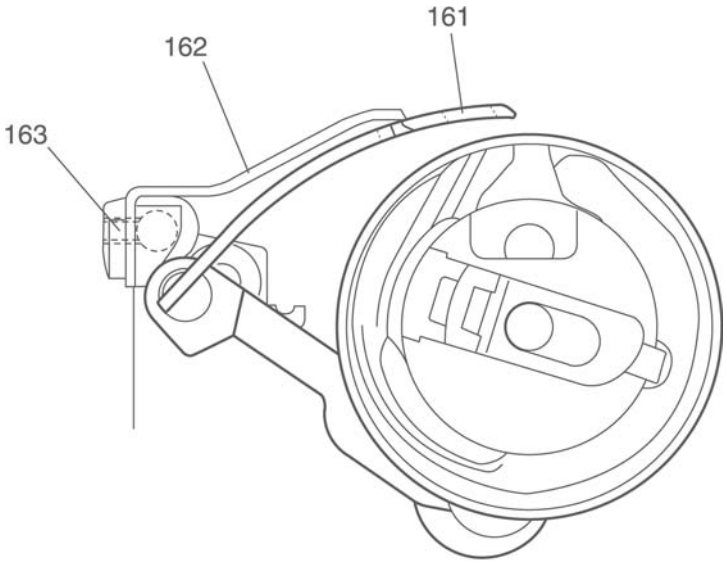

Fig. 47

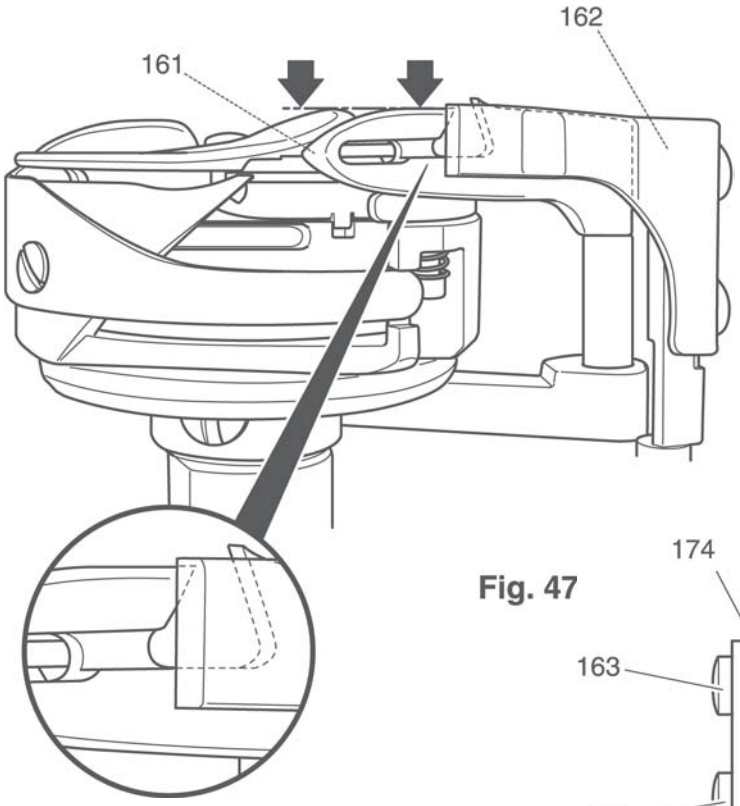

Fig. 47

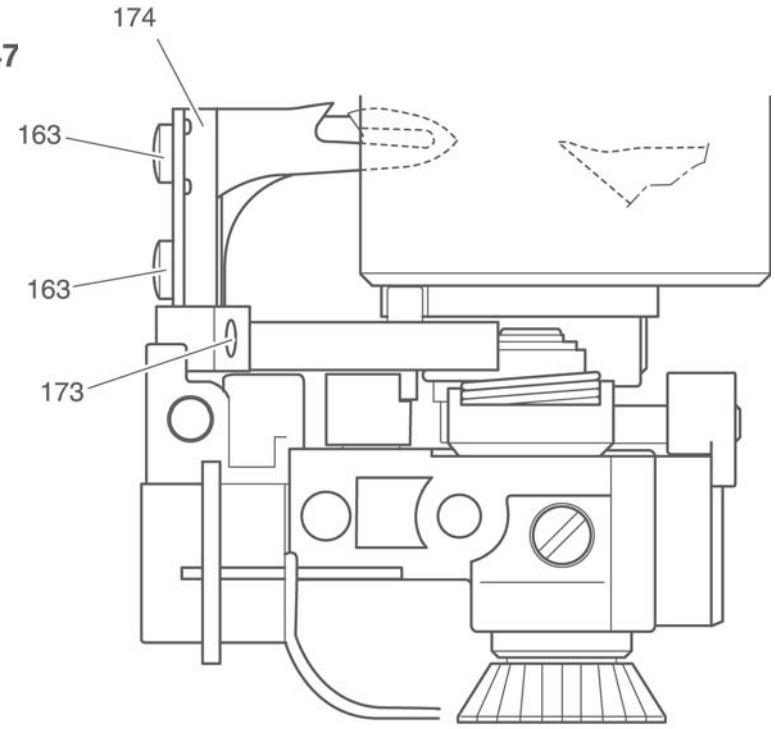

Fig. 47b

48. Exchanging the bobbin motor and SC motor unit

Removing:

- Remove the machine's plug from the mains.
- Take off the needle and the presser foot shoe.
- Take off the detachable work support.
- Take off the folding cover.
- Release the screw on the top cover.
- Carefully set down the top cover to one side, complete with sewing light and lead (Fig. 48).
- Release screw 16.
- Remove the sewing lamp with lead from the guide.
- Take off the top cover.
- Remove the two torx screws from the housing insert.
- Remove the housing insert.
- Remove screw 1 from the stand lid (Fig. 48a).

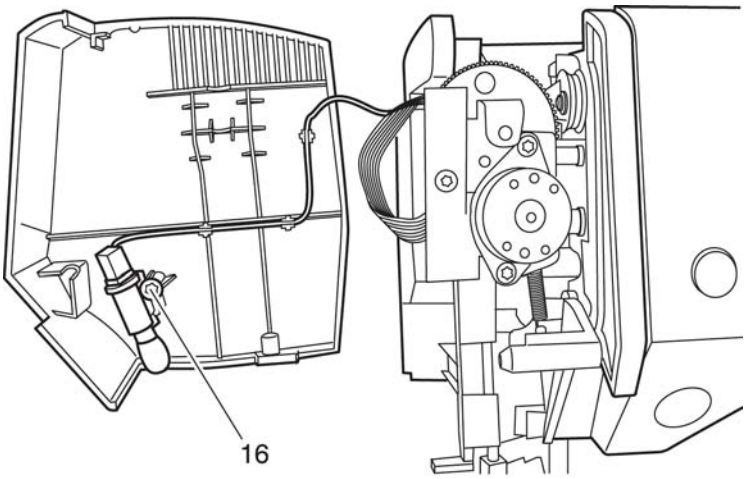

Fig. 48

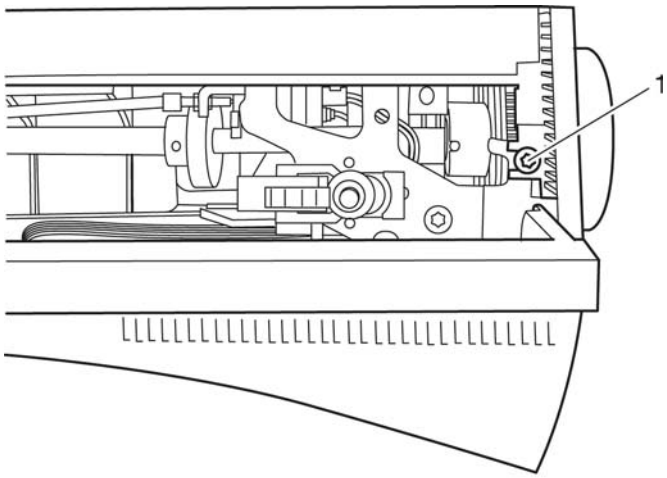

Fig. 48a

- Pull the two plug sockets 25 and 26 for the flat cable from the circuit board (Fig. 48b).
- Remove screw 19.
- Press the rear housing shell back until the rearmost screw 92 is visible (Fig. 48c).
- Remove the two screws 92.
- Disengage the carrying handle 81.
- Remove screw 93 from the Bowden cable's clamping plate (Fig. 48d).
- Disengage the Bowden cable at the presser bar guide.
- Remove the complete bracket.

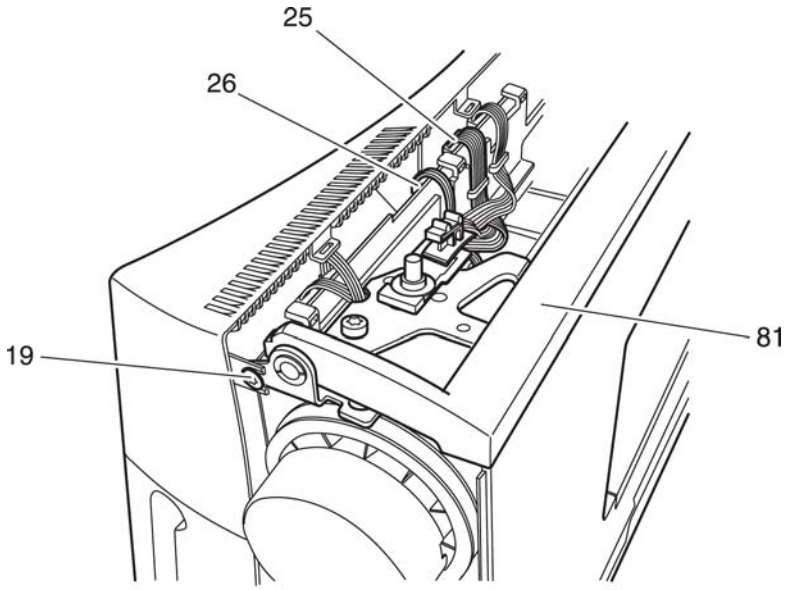

Fig. 48b

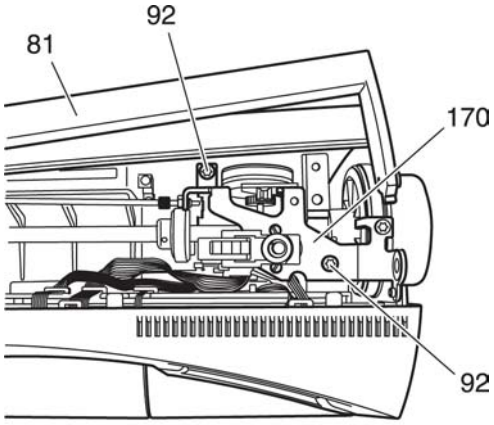

Fig. 48c

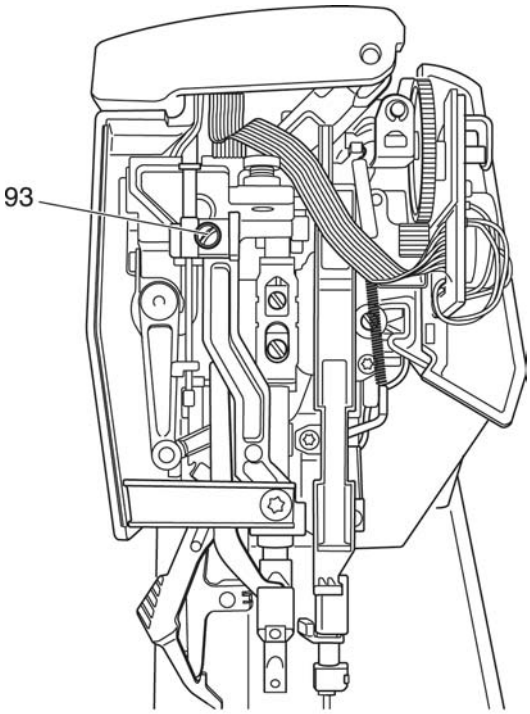

Fig. 48d

- Remove the two screws 164 and take off the stepping motor 165 (Fig. 48e).
- Carefully bend brake lever 166 slightly open and take it off.
- Remove the two screws 167 and take off the circuit boards.
- Remove the two screws 168 and take out the complete bobbin motor 169.
- Release locking nut 45.
- Remove the threaded piece 46 from the bracket 170.
- Take off the lock washer 171.
- Take the toothed rocker 172 with magnet off the pin.
- Take the Bowden cable out of toothed rocker 172 and bracket 170.

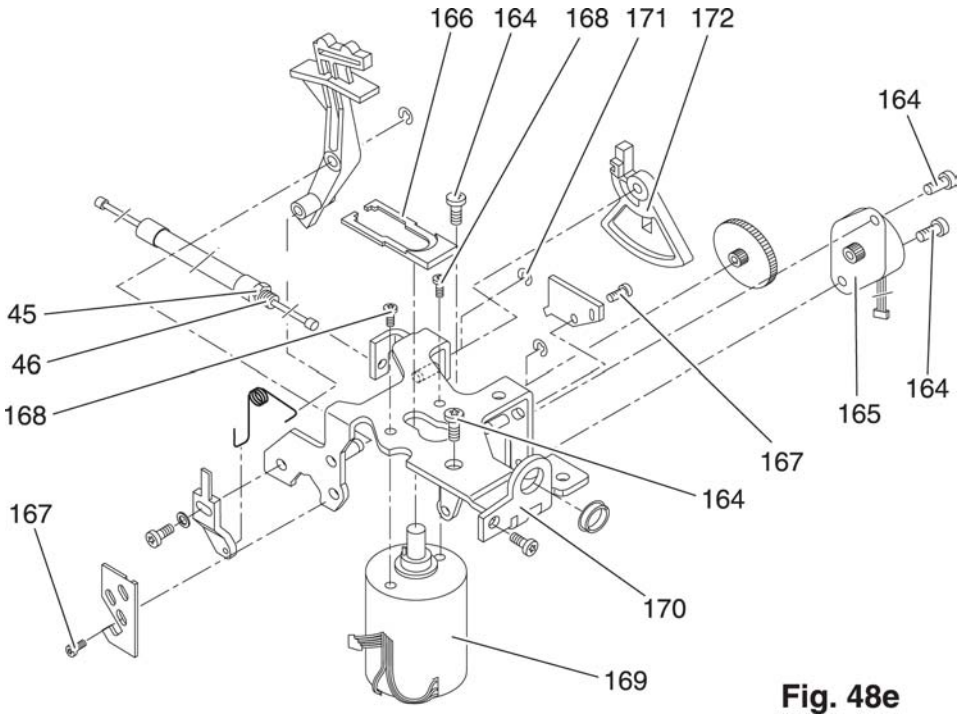

Fig. 48e

Installation

- Insert the Bowden cable in bracket 170 and toothed rocker 172.
- Fit the toothed rocker 172 on the pin.
- Fit the lock washer 171.
- Screw the threaded piece 46 into the bracket 170.
- Screw down the locking nut 45 slightly.
- Insert the bobbin motor 169 and secure with screws 168.
- Insert the brake lever 166.
- Insert both circuit boards and tighten both screws 167 slightly.

Basic setting of circuit boards:
Slacken off screws 167 slightly, slide the circuit boards until both pins are located at the center of the slots (Fig. 48e).

- Tighten screws 167.
- Insert the stepping motor 165 and tighten the screws 164 slightly.
- Release the screws 164 and press the stepping motor 165 against the toothed wheel with about 2-3 N. In this way, adjust the play between the two toothed wheels.
- Tighten the two screws 164.

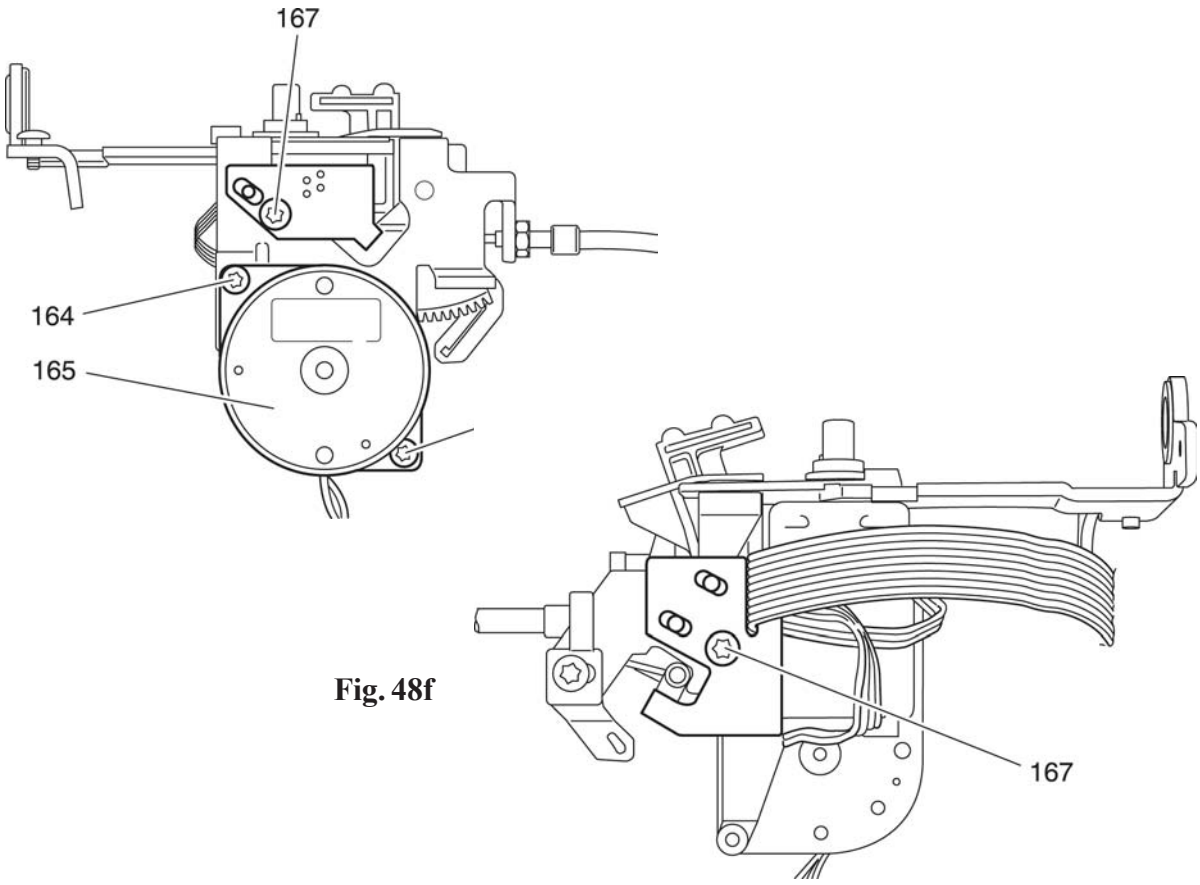

Fig. 48f

- Fit the two plug sockets 25 and 26 for the flat cable on the circuit board (Fig. 48b).
- Place the entire bracket on the housing shells.
- Place a correctly wound bobbin on the motor pinion.
- Push the bobbin motor lever with magnet to the right (bobbin winder switched on).
- Check amount of thread on the bobbin.
- The bobbin lifter must move immediately to the left (bobbin winder must cut out).
- If this does not happen, screw 173 must be slackened off slightly and sliding piece 174 be
- repositioned slightly.
- Repeat the adjusting procedure until the bobbin lifter operates correctly.
- Tighten screw 173.

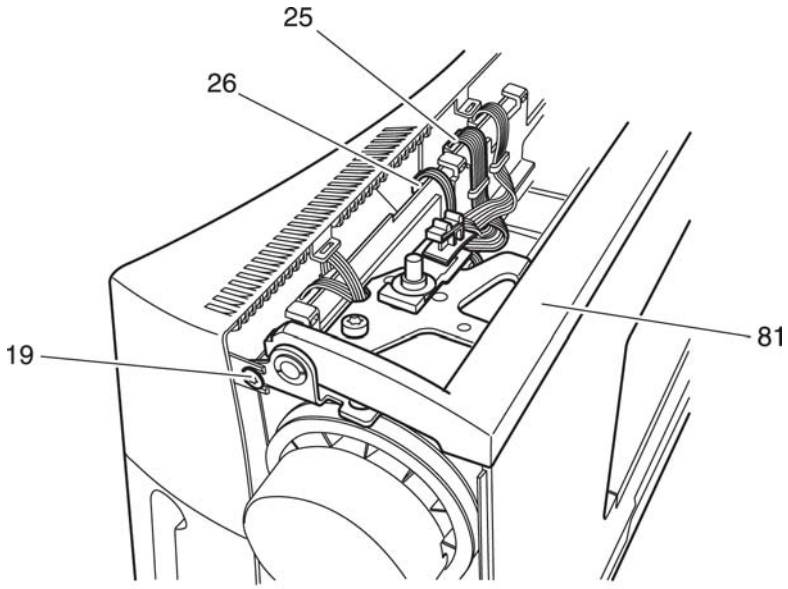

Fig. 48b

Notes:

49. Adjusting the toothed rocker

Note:

Only perform this adjustment if absolutely essential.

Principle:

In the „sewing position“, there must be 0.5 - 0.8 mm clearance between the toothed rocker 172 and the bracket 170 (Fig. 49).

Check:

- Plug the machine’s mains plug into the mains.
- Switch on the machine.
- Press the „Basic menu“ key.
- Press the „Context menu“ key
- Press the „Machine test“ key.
- Confirm the input with the „OK“ key.
- Press the „Test program“ key.
- Press the lower cursor key to browse through the display for the presser foot lifter.
- Press the „Presser foot lifter“ key.
- The positions of the presser foot lifter now appear on the touchscreen.
- Press the „Sewing“ key and check the clearance of 0.5 – 0.8 mm between the toothed rocker 172 and the bracket 170.

Adjustment:

- Switch off the machine.
- Slacken off screw 167 slightly on the circuit board (Fig. 49a).
- Reposition the circuit board slightly and tighten screw 167.
- Monitor by following the procedure described under „Check“
- Switch off the machine and repeat the adjustment procedure until the clearance is correct.
- Tighten screw 167.

Monitoring:

Proceed as described under „Check“.

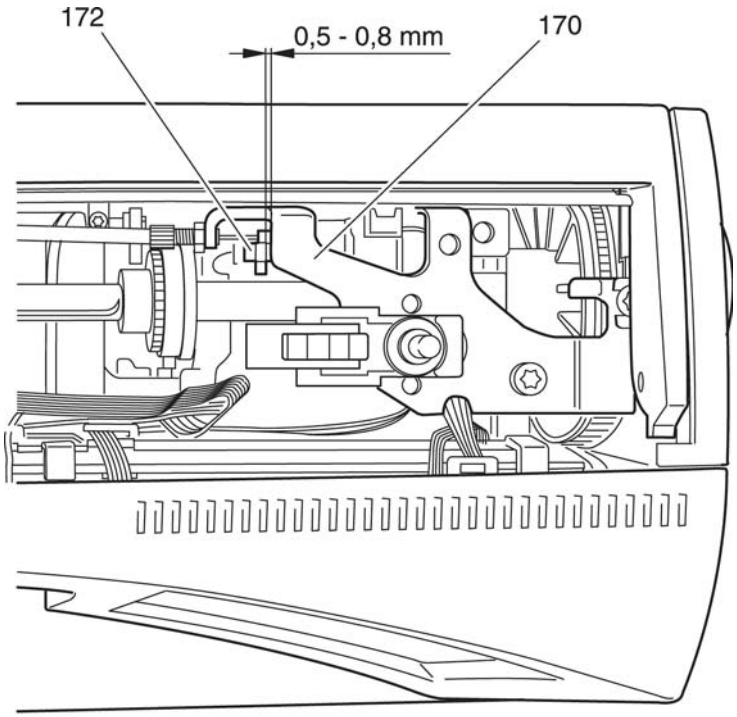

Fig. 49

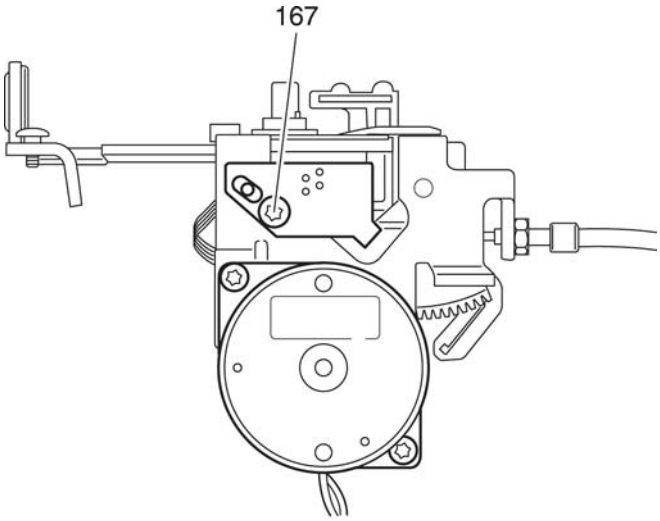

Fig. 49a

- Engage the Bowden cable at the presser bar guide.
- Position the Bowden cable's clamping plate and secure with screw 93 (Fig. 48d).
- Insert the carrying handle 81 in the bracket.
- Fit the complete bracket.
- Tighten the two screws 92 (Fig. 48c).
- Insert screw 19 and tighten.
- Position the flat cable correctly in the cable guides.
- Fit the stand cover and secure with screw 1 (Fig. 48a).
- Adjust the embroidery foot height as described in shell 10 of the adjustment and repair manual.
- Insert the housing insert and secure.
- Fit the complete top lid.
- Check the operation of the bobbin motor or SC motor unit.

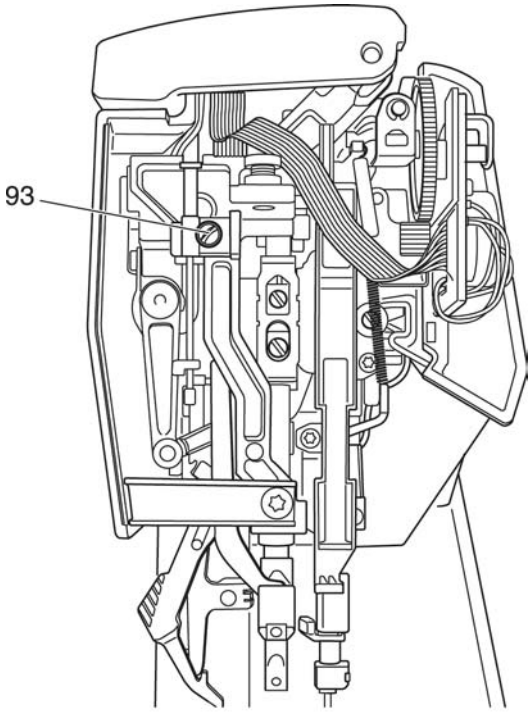

Fig. 48d

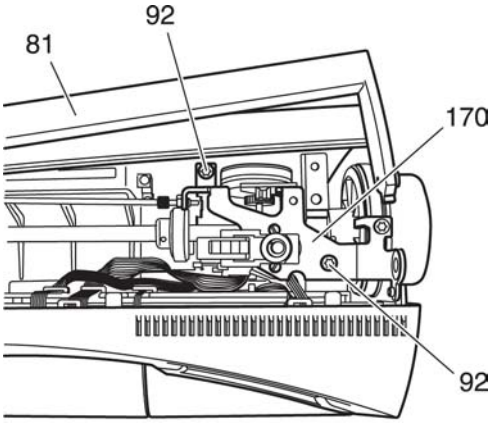

Fig. 48c

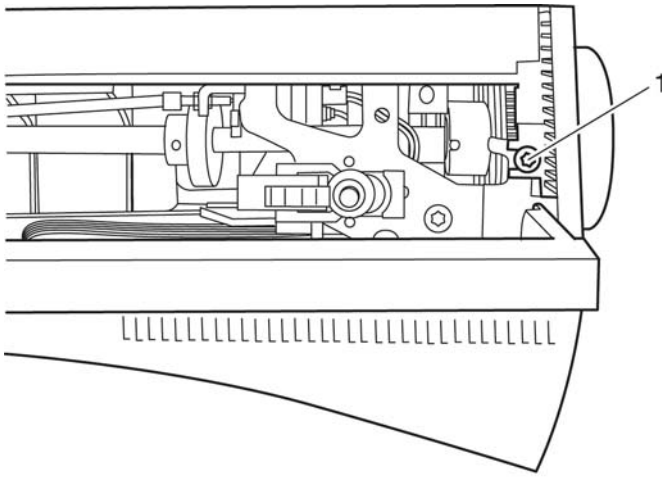

Fig. 48a

Upgrade of the creative 2144

The creative 2144 is preset by the manufacturer to the language of the country in which it is sold.

The customer can easily set a different language.

The machine can likewise always be updated to the latest software status.
This ensures that the creative 2144 will never be outdated.

There are two ways to implement an upgrade of the creative 2144 firmware.

1. Upgrade with a special Boot PCMCIA memory card

To do this, insert the Boot PCMCIA memory card into one of the card slots when the machine is switched off and then switch on the machine.

The machine detects the Boot card and starts the upgrade procedure automatically.
The following message appears on the machine's display:
„Update firmware:“ with the production date of the update software.

Then the version, the production date and the language version of the machine and the relevant data about the firmware on the Boot card are displayed. If both versions are identical or if the firmware on the Boot card is older than the machine version, the upgrade procedure is only initiated if the „Thread cutter“ key (scissors symbol) is pressed.

The upgrade procedure then starts and the machine program is started automatically when the upgrade is successfully completed.

A Boot card can be created with a suitable device (PFAFF Creative Card Station).
To create a Boot card, load the file „CardBoot_2144_xxx.upd“ on to a 4-Mbyte RAM card.
PFAFF Creative Card Stations with the firmware PFAFF LC-1 V. 1.00 can also program 4-Mbyte FLASH cards. The PFAFF PC card is suited for both of the card slots.

2. Upgrade from a PC via a serial interface on the machine

The machine must be connected to a PC via a „PFAFF I/O Card RS232“ interface (in future also a PFAFF I/O Card USB interface) and a suitable cable.
Start the „Upgrade2144“ software on the PC and choose the item „Firmware Update“ in the context menu on the machine.

The „Upgrade2144“ program displays brief instructions for carrying out the upgrade procedure:

1. Connect the sewing machine to the PC.
2. In the context menu on the sewing machine, select the item „Firmware Update“.
3. Press the „Yes“ button and then the **„OK“** button.
   (The machine now waits for data; it can only be retrieved from this status by switching it off.)
4. Start the Upgrade 2144.exe PC program.

To do so, create a shortcut on the desktop and then „drag and drop“ the file „SerialBoot_2144_xxx.upd“ on to this icon.
The program Upgrade 2144 then starts automatically.
It is even simpler to click on the *.upd file in Explorer with the right mouse key and then select „Open with…“ and create a shortcut to Upgrade 2144.exe.
(This has the advantage that in future you only need to click on the *.upd file to start an upgrade).
5. Follow the displayed instructions.
6. The PC now tries to set up a connection with the machine.
If this does not happen, an error message will appear on the PC after a short time.
Provided that the display on the machine has not changed, it is possible to abort the attempt by switching off the machine; the old firmware on the machine will still function.
If the connection has been established between the PC program and the machine, the first sign will be the „Needle down“ lamp, which lights up.

7. Wait until the upgrade procedure is complete.
The sewing machine program starts automatically.

Similar information appears on the display as with the upgrade using the PCMCIA card.
If the procedure was started and no connection was made, the machine can only be operated again by switching it off.
If the upgrade procedure was interrupted or disturbed during a serial transfer and the programming aborted, the machine will have no program.
The boot procedure may be started again after the machine has been switched on again.
In this case, the display remains undefined (usually black).
Nothing meaningful will appear on the screen until the second boot loader starts.
Serial booting requires a BIOS version number higher than 1.01.

Calibrating the Touch panel of the creative 2144

Note:

The Touch panel is correctly calibrated by the manufacturer and need only to be recalibrated if absolutely essential.

If recalibration is necessary, the machine indicates this automatically and switches to this mode.

Adjustment:

- Using a blunt object, touch the diagonal corner points and the center of the display at the points marked with crosses.
- The values located are stored in the buffer memory when the „Thread cutter“ key is pressed simultaneously.
- The center point must be confirmed again by way of verification.
- These values are stored by touching the Touch panel and the „Thread cutter“ key simultaneously.
  The Touch panel is now recalibrated.
- After emergency reset the Touch panel calibration appears automatically. However, it can be selected whenever required.

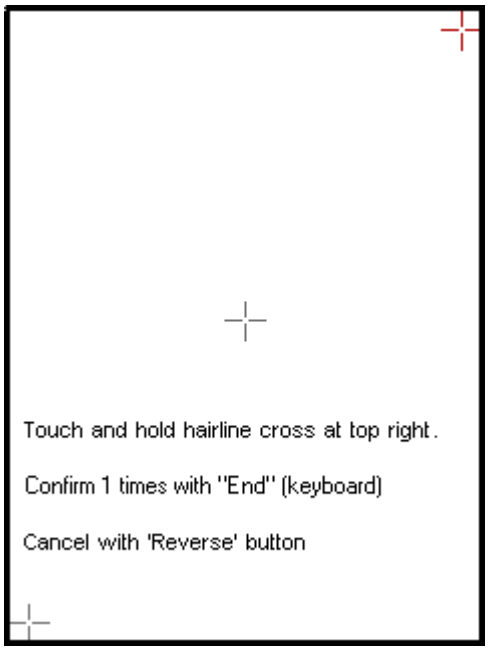

Calibrating the knee lift potentiometer of the creative 2144

Note:

The knee lift potentiometer is correctly calibrated by the manufacturer and need only to be recalibrated if absolutely essential.

Requirement:

The knee lift potentiometer is adjusted to its limit points, which are stored by touching the **„OK“** button.

Adjustment:

- Insert the knee lift in the guide bush of the base plate.
- Switch on the machine.
- Touch the „Main menu“ button.
- Touch the button for the „Context menu“.
- Touch the „Machine test“ button.
- Enter the code 4021.
- Confirm the input with the **„OK“** button.
- Touch the „Adjustment aids“ button.
- Touch the „Presser foot lift adjustment“ button to enter the calibration program.
- Store the lower value located by touching the **„OK“** button.
- Press the knee lift to the right and hold it in position; simultaneously touch the **„OK“** button to store the upper value likewise.
- Release the knee lift.
- The values are permanently stored by confirming with the **„OK“** button.

Important special functions of the creative 2144

Version number and status

The version number of the machine software and the BIOS (Basic Input Output System) can be called up via the „Context menu“.
If memory cards are being used, the version numbers of the memory cards are displayed.

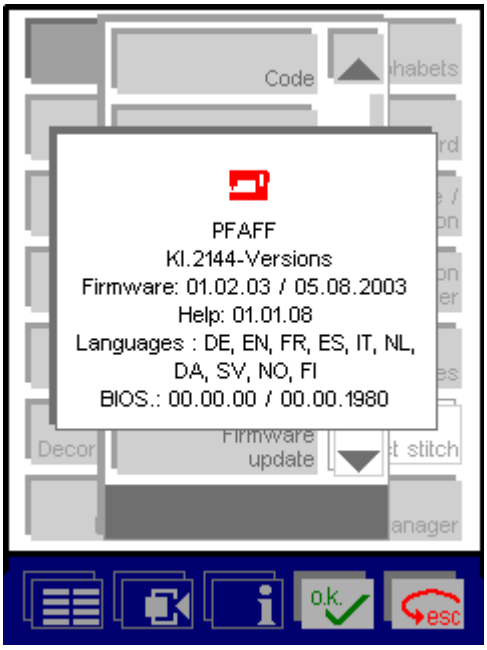

Explanation:

Firmware:	is the version with date of the actual machine program
Help:	is the version of „Online“-help
Languages:	are the available language versions of „Online“-help
BIOS:	is the version with date of the machine basic program
A:	Head-data (CIS-Tuple) of the card which is inserted in slot A:
B:	Head-data (CIS-Tuple) of the card which is inserted in slot B:

Programmed patterns

This is a selection of special patterns for purposes of adjusting the sewing machine.

Options for messages

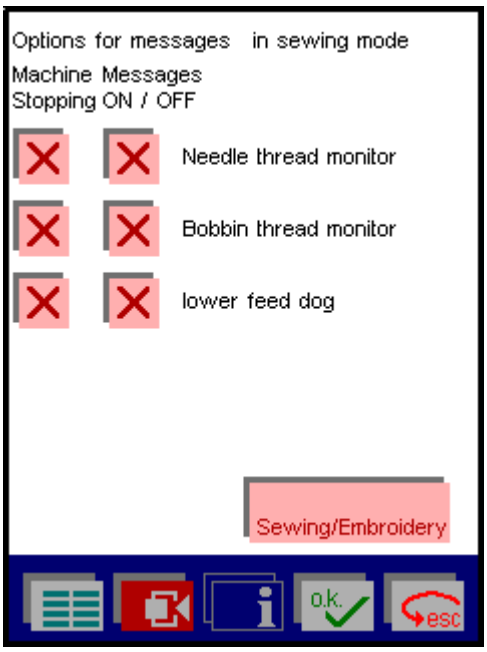

- Switch on the machine.
- Touch the „Main menu“ button.
- Touch the button for the „Contex menu“.
- Touch the „Options for messages“ button.

Select your settings and then press the **„OK“** or **„ESC“** button.
The settings are saved.

Emergency reset

- Press the „Thread cutter“ and „Pattern beginning“ keys simultaneously and hold them pressed.
- Switch on the machine.
- Hold the „Thread cutter“ and „Pattern beginning“ keys pressed until calibration of the touch screen is displayed.
- The machine can be accessed again after adjusting the new touch screen parameters and confirming with **„OK“.**
- The entered code is deleted.

The following now need to be set anew:
Knee lift potentiometer
Audio signal

Display of operating times of creative 2144

Counted times are:

- total power on time (power on:)
- sewing time (sew:)
- embroidery time (embroider:)

The operating time display is to be understood:

0. 00:00:00 / Days. Hours:Minutes:Seconds

The counted times are updated each 15 minutes.

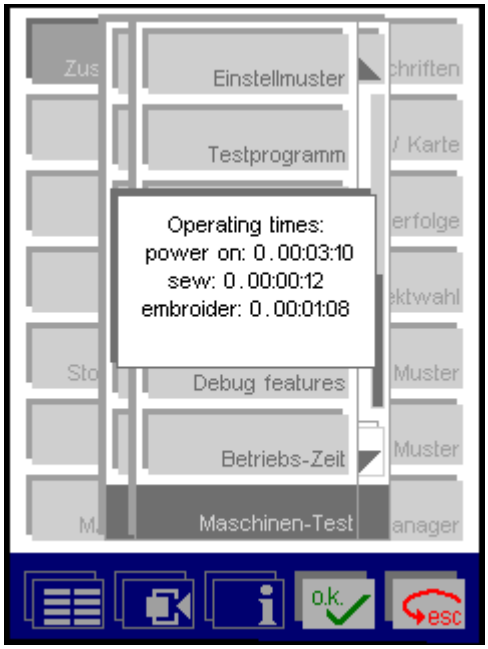

Adjustment of upper thread tension in embroidery mode

Adjustment:

- Switch on the machine.
- Touch the „Main menu“ button.
- Touch the button for the „Context menu“.
- Touch the „Machine test“ button.
- Enter the code 4021.
- Confirm the input with the **„OK“** button.
- Touch the „Adjustment help“ button.
- Touch the „Thread tension adjustment“ button to adjust the tension.
- Touch the **„+** or **-“** key (increase or decrease) until the upper thread tension is correctly adjusted in the embroidery mode.
- The value is permanently stored by confirming with the **„OK“** button.

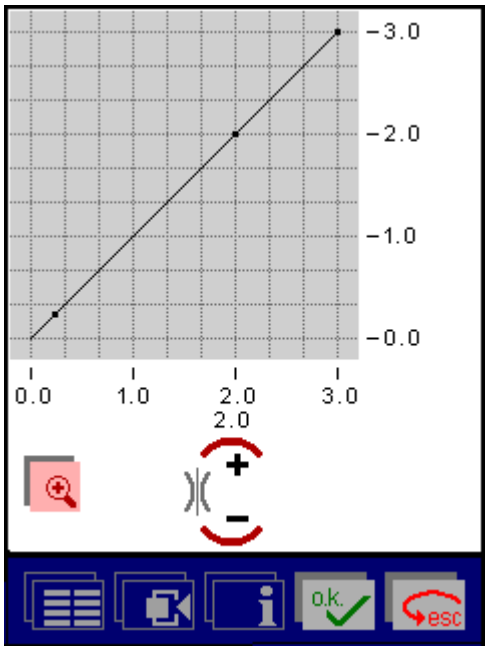

Machine test

The machine test menu is reached via the main menu in the „Context menu“ by entering an access code.

Only those tests which can be performed by the software or have to be controlled by it are described here.

A test should only be launched if the involved assemblies have already been successfully tested.

For example:
The machine motor must be turning in order to test the amount of thread on the bobbin; the machine motor should therefore be tested before testing the amount of thread on the bobbin.

Test program

The following accessories must be available for conducting the test:
Foot control, buttonhole guide, full bobbin case, knee lift and test memory card.

The „Thread cutter“ key (scissors symbol) or the **„OK“** button (if available) serves as the acknowledgement key; the current test can in addition be interrupted with the „Reverse“ key or the **„ESC“** button (if available).

All test results are recorded.

The test report can be transferred to a PC before exiting the test dialog.

There are two ways of testing the machine with the aid of a test program:

I. Direct testing of the malfunctioning electronic assemblies.

II. Checking all assemblies in sequence, recording the results and displaying the test results on the screen.

Test start

Display and LED's

The three LED's flash at different frequencies of 2 Hz, 1 Hz and 0.5 Hz.
Each time the lights flash, every 2nd pixel appears alternately in the following basic colors on the display WHITE, RED, GREEN, BLUE, BLACK.
An evaluation window is displayed after completion of the test.

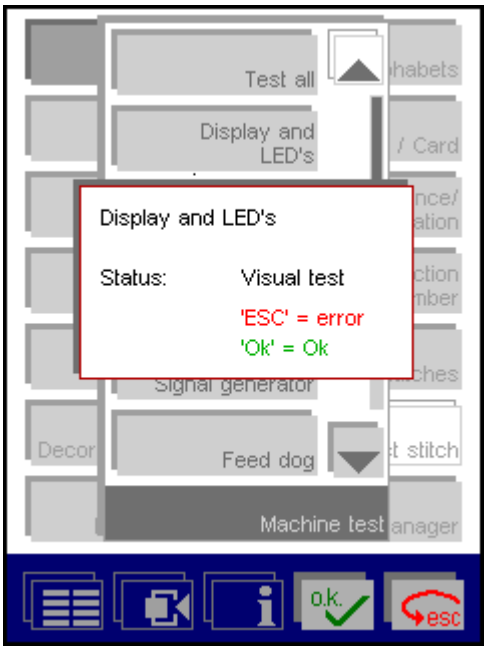

Terminate the test by pressing **„OK“** (in order to accept the results) or **„ESC“** (in order to exit the test without accepting t results).

Keys

The keys in the machine head are shown as standard text buttons on the screen.
They are inactive at the start of the test, and are shown as „active and selected“ when the keys (not the buttons) are pressed, and as „inactive and selected“ when released.

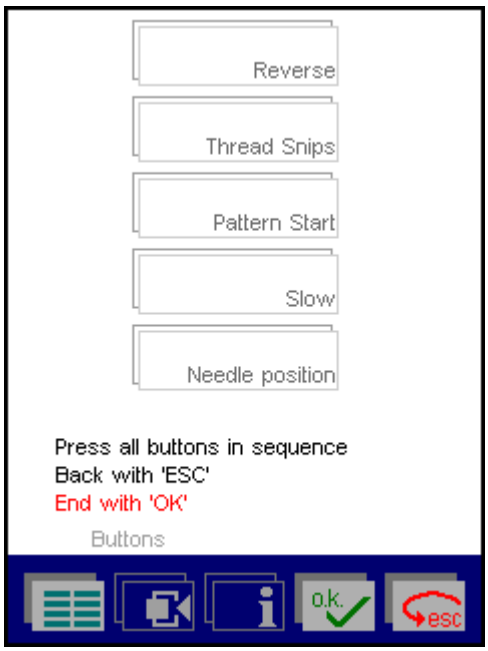

The operator is requested to operate the keys in any chosen order.
Don't press the keys simultaneously.
If not every key has been identified until acknowledgement with **„OK“**, an error message will be issued.
Press **„ESC“** to exit the test.

If the „**Full test**“ mode is activated, the next test will be automatically executed after completion of the test.
The illustration shows the display, which appears when the „Reverse“ and „Slow sewing“ keys are pressed.

Touch panel

The centre of each of the three crosses must be pressed with a blunt object in order to align the target and actual markers.
Don't use a sharp-edged object. It could damage the touch panel.

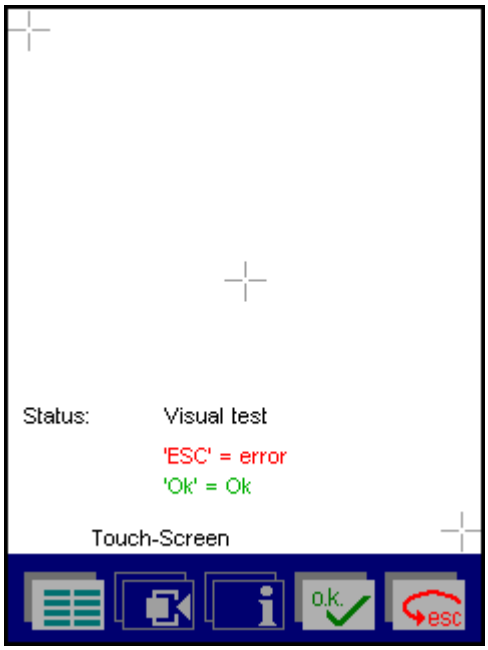

Terminate the test by pressing **„OK“**
(in order to accept the results)
or **„ESC“**
(in order to exit the test without accepting the results).

Signal generator

All audio outputs must be tested via standard text buttons.
You can select the desired audio output buttons or the „all“ button.

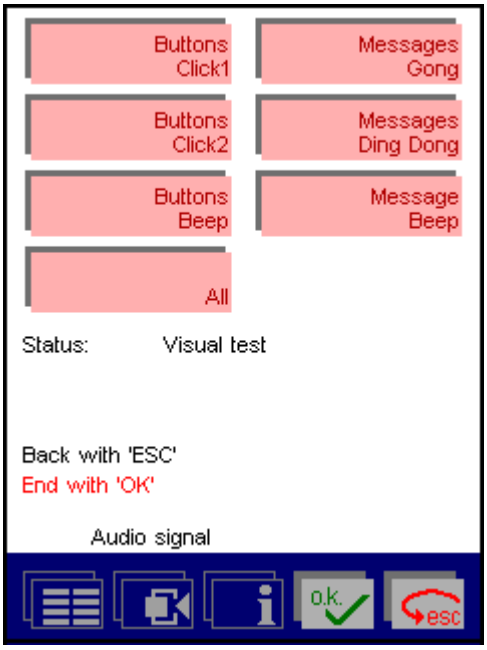

When all audio outputs have been actuated, the status of the visual inspection must be modified with **„OK“**.
Terminate the test by pressing **„OK“**
(in order to accept the results) or **„ESC“**
(in order to exit the test without accepting the results).

Feed dog

The feed dog bracket must be moved once manually to each of the „lowered“ and „not lowered“ positions.
When both positions have been identified, the test is terminated by pressing **„OK“**.
If the „**Full test**“ mode is activated, the next test will be automatically executed after completion of the test.

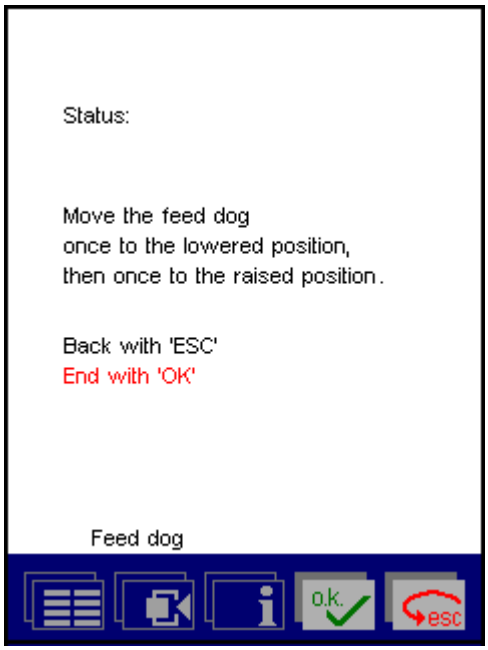

Foot control

The foot control is a variable resistor whose value is measured by an analogue method.
When not in use, its value is „infinite“.
When the operator is requested, the foot control must be pressed or released.

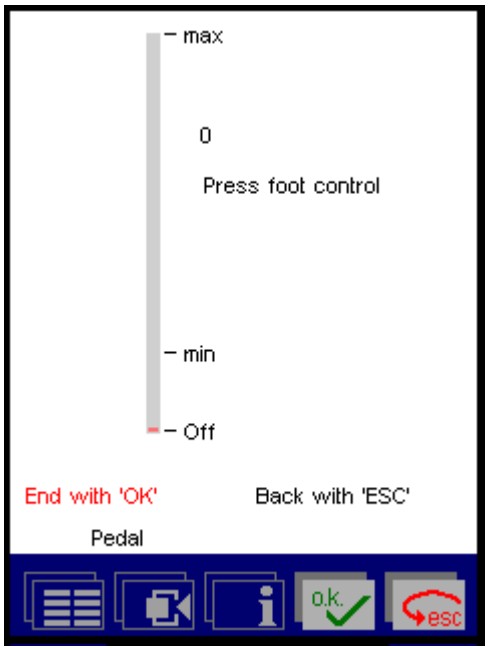

A progress bar which indicates the analogue measurement appears on the display.

Each of the „off“ and „max.“ marks must be reached twice; otherwise no OK will be issued.

If the „**Full test**“ mode is activated, the next test will be automatically executed after completion of the test.

Stepping motors

The stepping motors are grouped together according to function; each group is tested separately.
The standard text buttons are „active“, apart from the embroidery unit button, which is only active if an embroidery unit has been fitted and detected.
The stepping motors for the selected group are normalised in succession and moved at their maximum stroke.
Stepping motor units with limit switch (cross-feed motor, presser foot unit, thread tension and embroidery unit) have to reach the limit (i.e. position 0 = normal position) and leave it during operation.
Otherwise an error message will be issued.
The zigzag assembly and the feed stepping motor don’t have a limit switch.
The operator is requested to carry out a visual check.
The status of the limit switches is displayed.
The stepping motors move to the limit positions.
The first time they also move to the middle position (except the embroidery unit).
Then they move 2 times at their maximum stroke with max. speed and stop in the middle position.

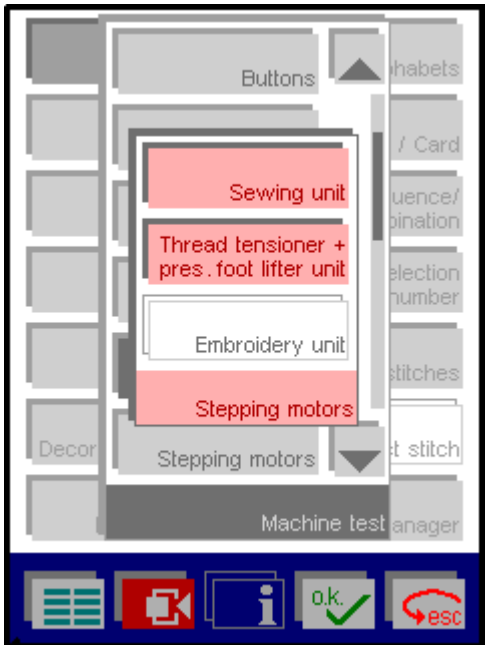

Important:

Always check that the presser foot has been lifted, before testing the embroidery unit.
Don’t fit the hoop in the embroidery unit as long as the „Hoop recognition“ button is shown as „inactive“.
Otherwise the embroidery hoop getting caught on the lifted presser foot can damage the machine!

The individual dialogs are:

Sewing unit:

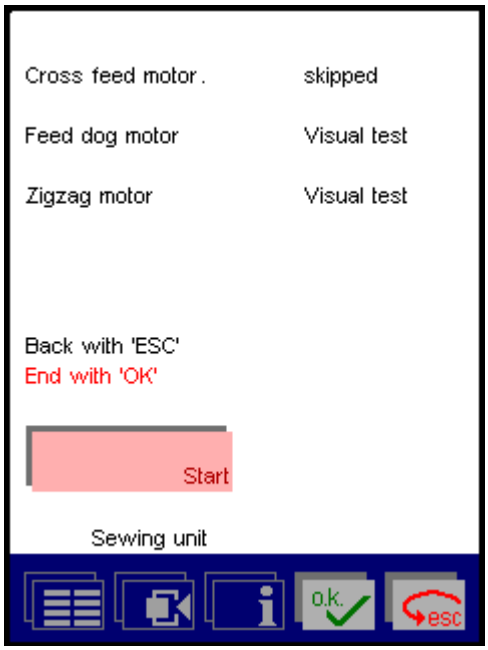

Thread tension and presser foot unit:

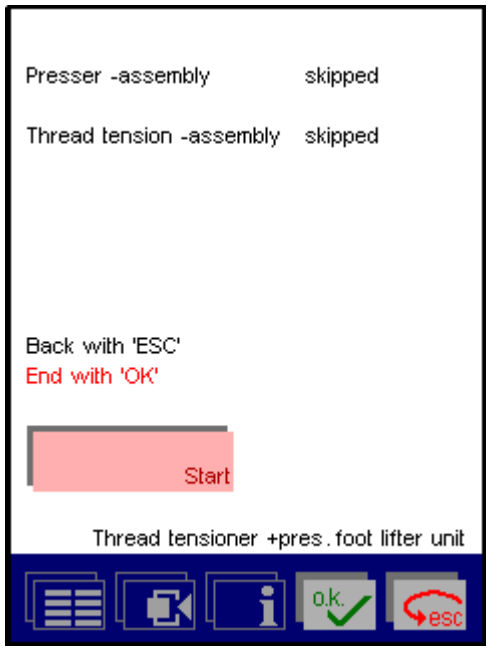

Embroidery unit:

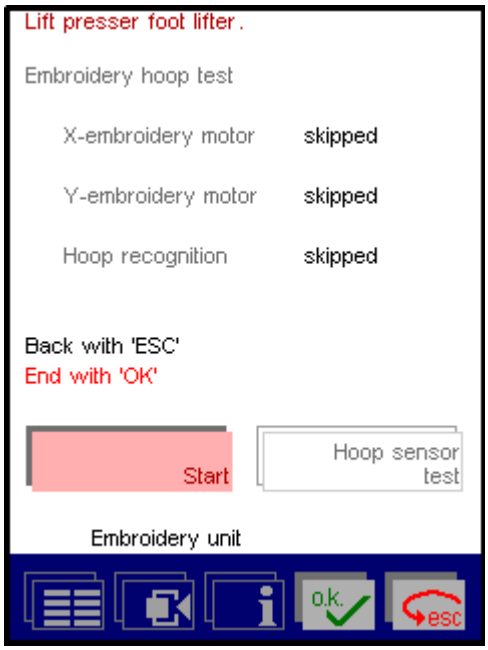

To test the hoop recognition, an embroidery hoop with magnetic size detection must be clamped in so that a corresponding signal is generated.
The start value and the end value of the magnet position (clearance of the magnets from the „zero“ position in 1/10 mm) are displayed.
This test will not be executed in the „**Full test**“ mode.

Thread tension

The tension of the sewing thread is adjusted by squeezing together a tension spring which acts on the tension discs.

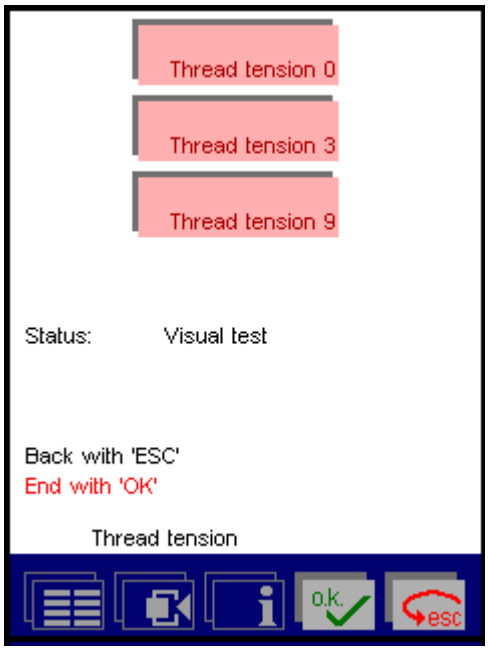

Three tensions are tested:

- Not taut (tension value 0)
  Tension discs should be open.
- Standard value (tension value 3)
  Thread tension of 1N when using machine embroidery thread, size 50
- Limit value (tension value 9)

These three positions must be selected by standard text buttons; the current button is shown as „active and selected“
Move embroidery foot to sewing position!
If the „**Full test**“ mode is activated, the next test will be automatically executed after acknowledgement of the visual check

Bobbin winding motor

The operator is requested to switch on the bobbin winding motor (press in bobbin lever).

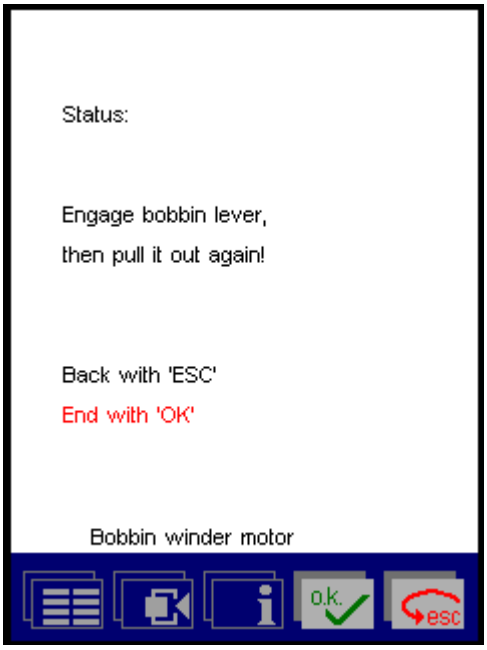

The motor starts up slowly.
A full bobbin is simulated by operating the bobbin lever manually; this halts the motor (limit switch).

The test is finished.

If the „**Full test**“ mode is activated, the next test will be automatically executed after completion of the test.

Presser foot lift

The machine moves to the corresponding positions when the appropriate buttons are pressed:

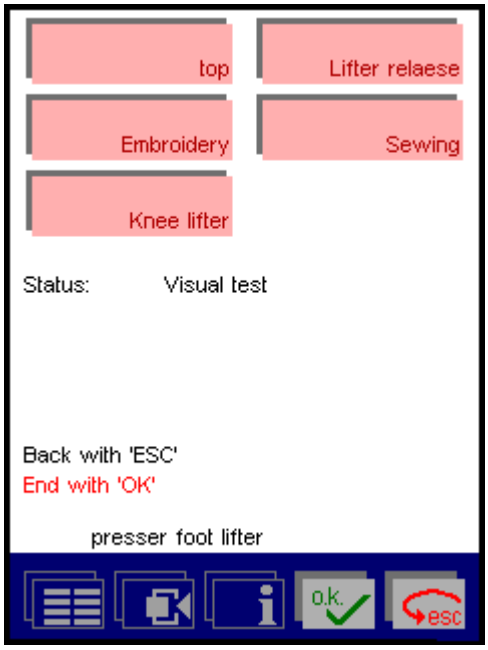

- Raised position
  [10.3 mm above needle plate]
  The limit switch must be reached and the manual lever must be released
- Embroidery position
  [5.3 mm above needle plate]
- Sewing position
  [Foot resting on needle plate]
- Knee lift
  [Presser foot follows the knee lift]

If the „**Full test**“ mode is activated, the next test will be automatically executed after acknowledgement of the visual check.

Buttonhole control

The buttonhole gauge consists of a measuring rail and a dual-track forked light barrier. The 90° out-of-phase signals generated when the measuring rail is moved are counted by the hardware (ASIC), with the total running up or down depending on the direction of movement.

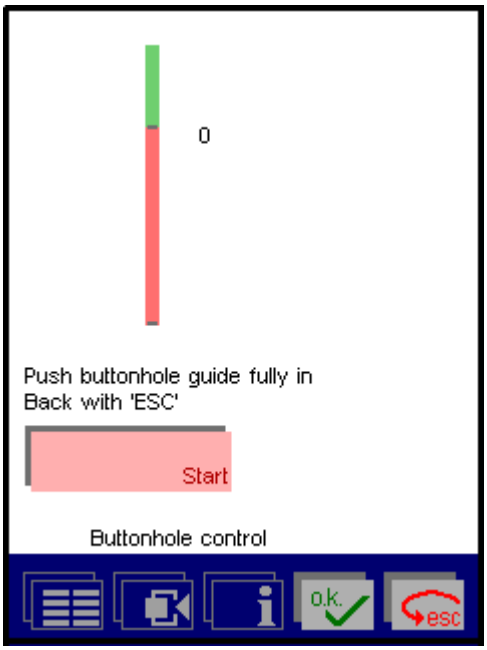

The operator is requested to insert the measuring rail to the limit.

The measuring rail must be pulled out after pressing the „START“ button.

The counter reading is displayed in the form of a number with an analogue progress bar (see foot control).

If a value of min. 100 is not reached, an error message will be issued.

If the „**Full test**“ mode is activated, the next test will be automatically executed after completion of the test

Synchronizer

The synchronizer consists of two forked light barriers, which scan two coded discs supplying four different signals per revolution of the machine.
The handwheel must be turned twice by the operator manually, with a connected sewing mechanism.
All possible combinations of the synchronizer sensor must be covered during the process.
The revolutions counter is reduced in the display.
By way of a visual check, a segment consisting of bitmaps appears on the screen to indicate the current position of the sensor.

The current position area is displayed in colour (although the following illustration shows all the areas in colour, only the actual area will be displayed in colour during the test).

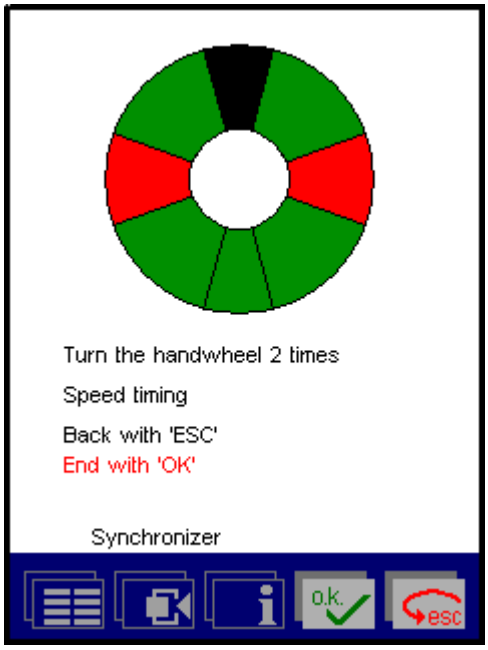

Black: stop area for „stop at the top“

Red: no stepping motor for sewing operation is allowed to move here

Green top: area for the zigzag stepping motor and the embroidery unit

Green bottom: area for the feed stepping motor.
The change-over from red to green is the trigger signal for the corresponding stepping motor

If the „**Full test**“ mode is activated, the next test will be automatically executed after completion of the test.

Machine motor

If the foot control has already been operated, the operator will be requested to release it again.
The cycle indicator comprises a forked light barrier, which scans a toothed wheel located on a motor shaft.
The flanks of this signal are measured as a function of time and counted.
The actual speed and the target speed are displayed in the form of an analogue progress bar.

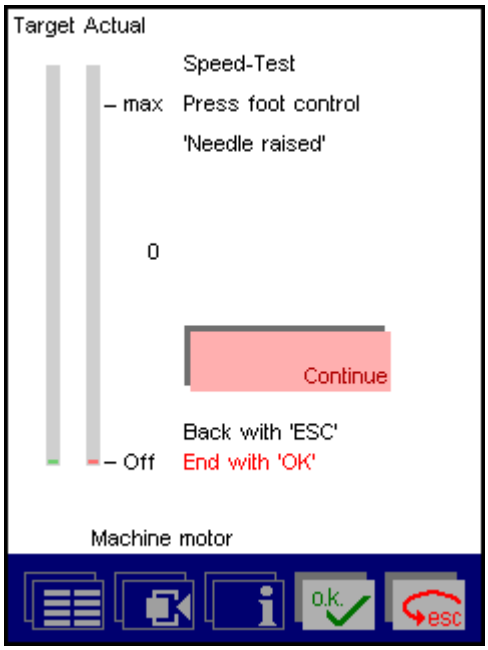

The „NEEDLE RAISED“ stop position is set. The operator is requested to press the foot control right down.

The machine slowly increases the target speed (the speed values are displayed), up to the max. speed.

The machine then halts in the top position. The operator is requested to release the foot control.

If the „**Full test**“ mode is activated, the next test will be automatically executed.
A test is requested for each slot.

Needle stop down

The needle stop positions are combinations of the values from the synchronizer and the cycle indicator.

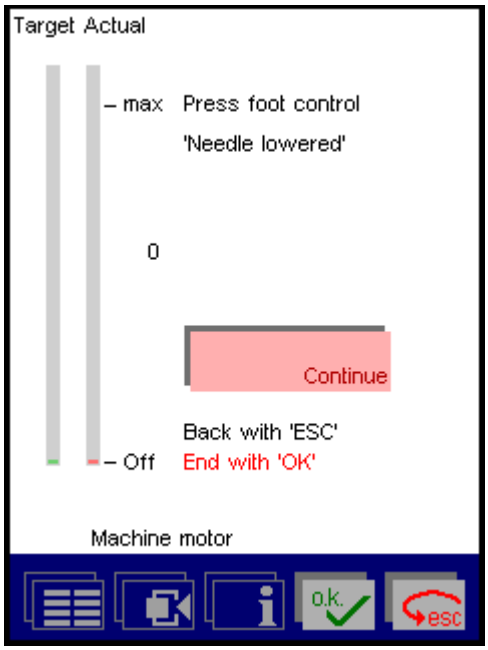

The operator is requested to press the foot control.
The sewing machine slowly performs one revolution and halts in the lower position.

If the „**Full test**“ mode is activated, the next test will be automatically executed.
A test is requested for each slot.

Bobbin thread monitor

The bobbin thread is monitored by a light barrier.
The light only passes though a bobbin when it is almost empty; this generates a signal.
The barrier light is pulsed because of the great amount of energy required.
The pulse is derived from the speed indicator signal and is approx. 50 usec long.
The synchronous scanning of the light barrier receiver is performed by the hardware.

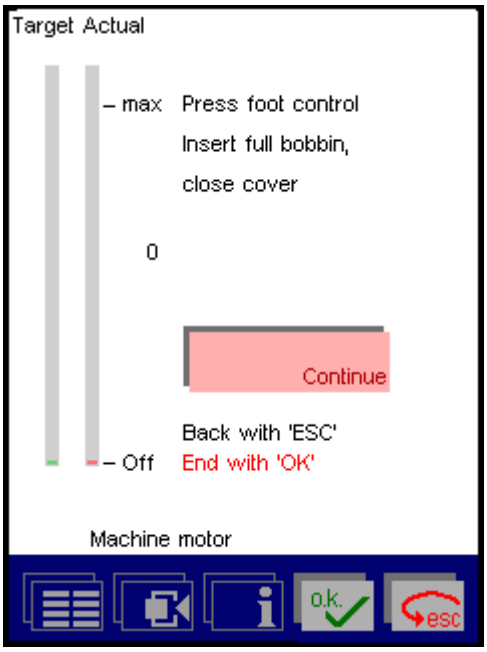

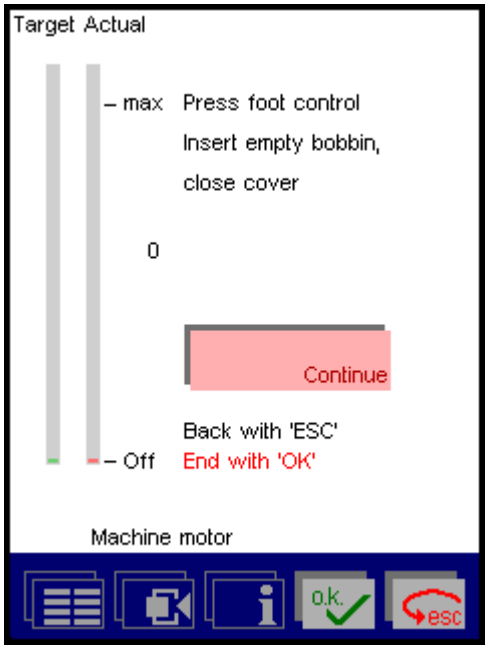

The operator is requested to fit a full bobbin case, to close the free-arm cover and to press the foot control.
The sewing machine performs one revolution; no bobbin thread signal should be given.
The operator is requested to release the foot control, to fit an empty bobbin case, to close the free-arm cover and to press the foot control.
The sewing machine performs one revolution and then halts.
The operator is requested to release the foot control.

If the „**Full test**“ mode is activated, the next test will be automatically executed.

Overload protection

After pressing the foot control a further time, the overload protection is tested:
The machine runs at the synchronizer speed (approx. 100 / min) and the operator is requested to block the handwheel for about 10 seconds; this causes the machine motor to shut down for about 4 seconds. Message: „Motor stopping“.
The operator is requested to release the foot control.

If the „**Full test**“ mode is activated, the next test will be automatically executed.

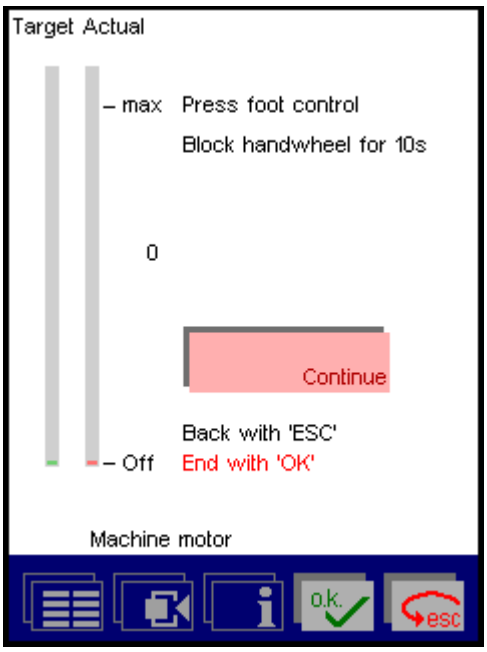

Thread cutter

The thread cutter consists of an electromagnet, which engages the thread cutter mechanism in the sewing mechanism.
The stepping motors for sewing operation move to the requested positions.
By pressing the „Thread cutter“ key the machine performs one more revolution, cuts the needle and bobbin thread and halts in the upper position.

This test doesn’t run as an extra test, as it is available in every sewing menu.
The thread cutter must be audible.

(To test correctly, the test must be performed with fabric and thread, to see whether the thread is genuinely cut).

Memory cards

When requested, insert one **RAM memory card** in each of the machine slots.
The machine checks the sizes of the cards and writes and reads check bytes to/from the cards.
If no programmable card is found, the value 0 for the memory size is displayed.
The check bytes are selected in such a way that adjacent data-bus lines alternatively have a different status (data byte = 0xaa or 0x55).
The address lines are tested in such a way that all lines = 0 and 1 line is shifted through the data bus.
Then the inverse procedure is performed so that all lines = 1 and 0 line is shifted through the data bus.

If the read data coincide with the written data, the following display appears:

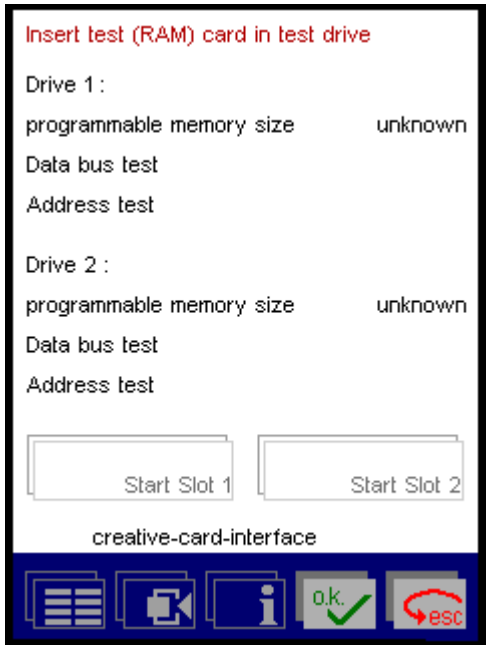

The additional information „incomplete“ appears where memory cards have less than 4194k memory area.
If the memory card has the maximum size of 4194k, there is an interface error.

If the „**Full test**“ mode is activated, the next test will be automatically executed.
A test is requested for each slot.

For testing both drives, one **RAM memory card** only is required.

PC interface

The exchange of data between the machine and the PC is made via the processor's serial interface, via an intermediate PCMCIA interface card.

The machine registers itself with:
A ring buffer of 128 bytes (= characters) is made available for the received data; its contents are shown on the display.
The machine now constantly sends the following character string at the above baud rate:
„PFAFF Creative 2144“

If the machine is connected to a PC via the PCD modem lead (interface card), this character string can be received with suitable software.
The characters sent by a PC are displayed on the sewing machine display below the line „Received data“.
Only ASCII characters (no special characters) can be displayed.
If a null modem is connected up (send line connected to receive line), the character string sent by the machine itself is received and displayed.
The transmission from a slot to another slot is not supported.

If the „**Full test**“ mode is activated, the next test will be automatically executed after acknowledgement of the visual check.

A test is requested for each slot.

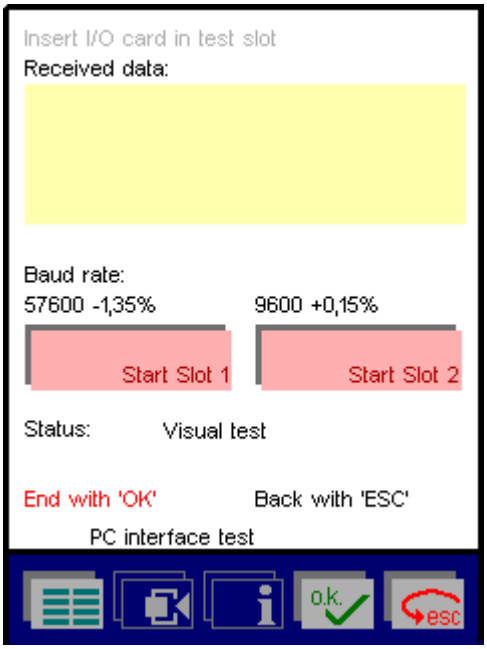

All tests

If the function „All tests“ is activated, all above mentioned tests are executed in the indicated order and the results are recorded.

Test end / Test result
The test result is shown on the screen.

Page 1

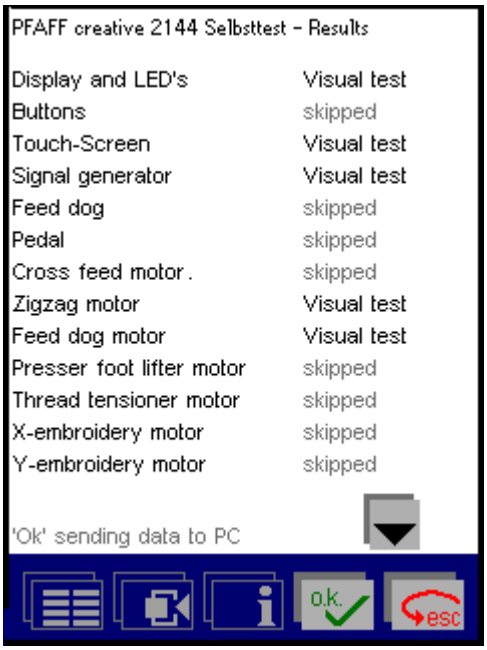

Page 2

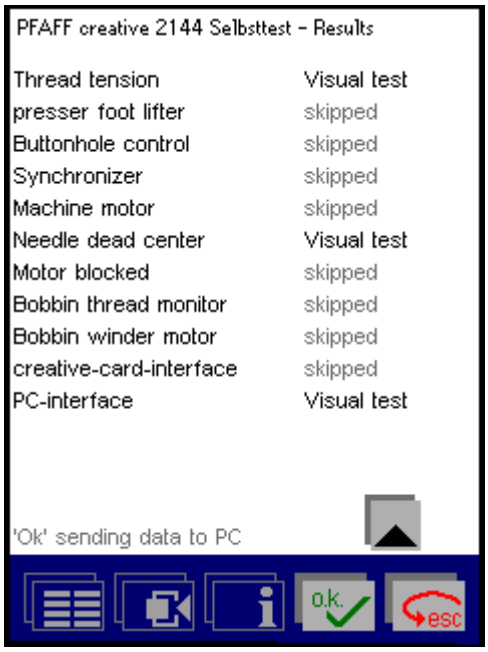

If the individual test was **„OK“** or **„SK OK“** , SK (= visual check) appears.
If the test was skipped in the individual dialog, this is indicated by „SKIPPED“.
Otherwise **„ERROR“** or **„SK ERROR“** appears.

The operator is given an option to transfer the test results to a PC. Each page has to be transferred.

Please consider that the screen dialogs may be changed in future versions.

50. Troubleshooting table for creative 2144

Error occurring	1st exchange part	2nd exchange part
Machine is switched on, does not run when pedal switch operated	Mains lead	Food control
Machine starts by itself after switched on for a time	Foot control	Circuit board
Zig-zag stepping motor operates/runs constantly or needle bar moves constantly	Circuit board	Zig-zag stepping motor
Feed stepping motor operates/runs constantly or feed dog moves constantly	Circuit board	Feed stepping motor
Machine starts at maximum speed then comes to standstill	Cycle indicator	Circuit board
Crossfeed stepping motor operates/runs constantly the feed moves constantly	Circuit board	Crossfeed stepping motor
Thread monitor does not respond	Hook area, hook mirror Bobbin case **Check:** Clean the 2 checking eyes	Thread monitor

3rd exchange part	4th exchange part	5th exchange part
Circuit board	Motor	Cycle indicator
Circuit board	Motor	Cycle indicator
Circuit board		

Troubleshooting table for creative 2144

Error occurring	1st exchange part	2nd exchange part
Feed out of step Pattern sews straight stitch in incorrect lengths for-wards or backwards	**Check:** Upper or lower feed sticking or too loose	Sliding block sticking or has too much play
Needle sideways move-ment not correct, pattern laterally offset	**Check:** Needle bar frame sticking or too loose	Zig-zag stepping motor
Take-up lever raised and lowered position not correct	**Check:** Adjustment Synchronizer	Synchronizer
Speed regulation (faster or slower)	Foot control	Circuit board
Crossfeed out of step (knocks or pattern only 90 mm wide)	**Check:** Crossfeed mechanism sticking or too loose	Crossfeed circuit board
Needle thread break sensor	Thread break sensor	Circuit board
Touch Panel not working	**Check:** Surface for damage	**Check:** Cable inserted corretly?
No background lighting on LCD-Display	**Check:** Cables inserted corretly?	Inverter

3rd exchange part	4th exchange part	5th exchange part
Feed stepping motor	Circuit board	
Circuit board		
Control plate		
Cycle indicator		
Crossfeed stepping motor		
Control plate		
Check: Touch panel calibrated	Exchange touch panel	Control plate
Neon tube	LCD-Display	Control plate

Troubleshooting table for creative 2144

Error occurring	1st exchange part	2nd exchange part
The control panel keys are not working	**Check:** That no key is sticking	**Check:** contact surface behind the keys and the pushbuttons
Machine does not run Display not functioning	Mains lead	Base plate
Thread tensioner not working	**Check:** Connections of leads	**Check:** Leads fitted correctly?
Thread cutter not working	**Check:** Functioning of key	**Check:** Leads and connections
Machine does not halt when needle threa snaps	**Check:** Options for messages	**Check:** Needle thread sensor
Presser foot lifter not working	**Check:** Pull cable	**Check:** Leads and connections
Knee lifter not working	Recalibrate toggle lever	**Check:** Leads and connections
Buttonhole sensor not working	**Check:** Leads and connections	Buttonhole sensor

3rd exchange part	4th exchange part	5th exchange part
Check: whether circuit board is fitted correctly	**Check:** Leads fitted corretly?	Circuit board
Circuit board		
Circuit board		
Circuit board	Thread cutter	
Check: Leads and connections	Needle thread monitor	
Check: Toothed wheels	SD motor assembly	
Knee lifter sensor		

Troubleshooting table for creative 2144

Error occurring	1st exchange part	2nd exchange part
Embroidery unit not working correctly	**Check:** with the test program	Embroidery unit
No frame recognition frame missing	**Check:** Magnet on Embroidery unit	**Check:** Embroidery unit not set correctly

	3rd exchange part	4th exchange part	5th exchange part
Circuit board			
Embroidery unit			

PFAFF

PFAFF GmbH
Amalienbadstraße 36
D- 76227 Karlsruhe
Telefon + 49 (0)721/4001-0
Telefax + 49 (0)721/4001-513

E-Mail: info@pfaff.com
http://www.pfaff.de

Druckerei Gablenz GmbH
Stettiner Straße 17
76356 Weingarten

Printed in Germany
Technische Änderungen vorbehalten
Subject to alterations in design

Sous toute réserve de modifications techniques

Salvo modificaciones técniche
Con riserva di modifiche tecniche
00105 English
C 2003 Copyright VSM Group AB
All rights reserved